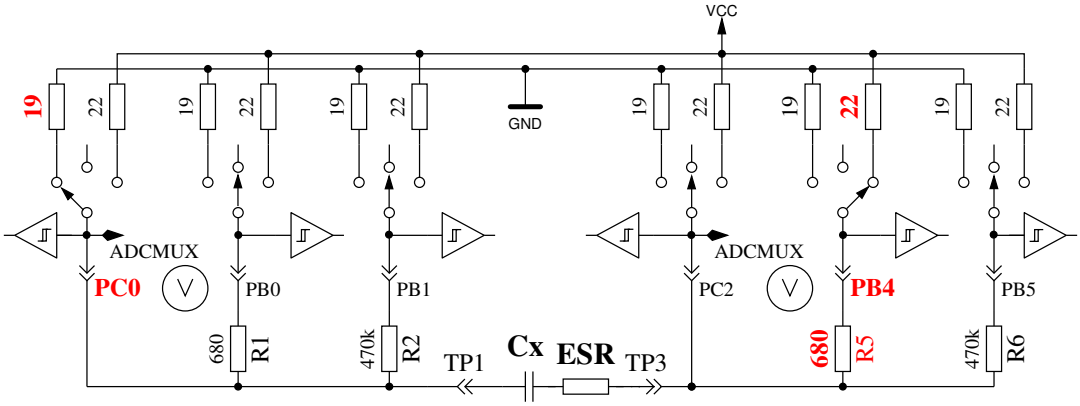


Voltage measurement with charge current

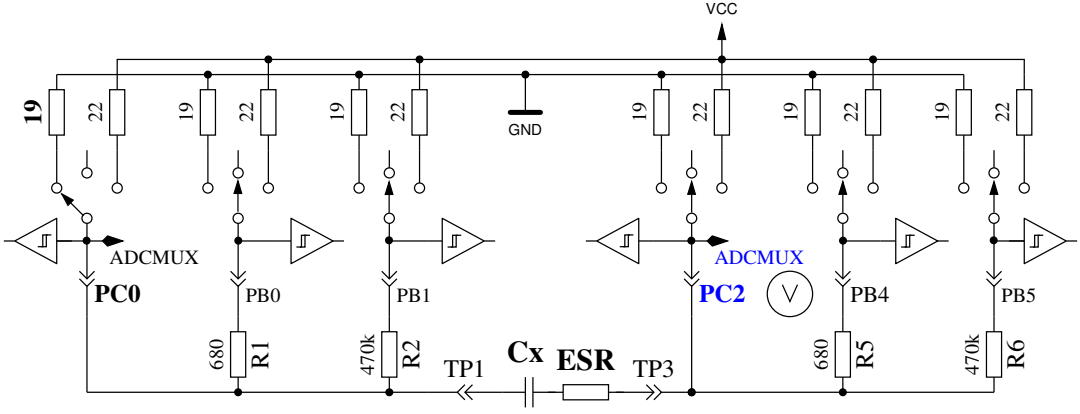


Voltage measurement without current