REV.	DATE	ECN NO.	MODIFICATION	APPROVER
A	2008/05/05	/	NEW	Vicky

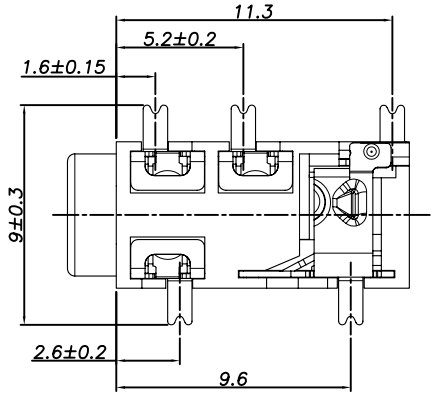

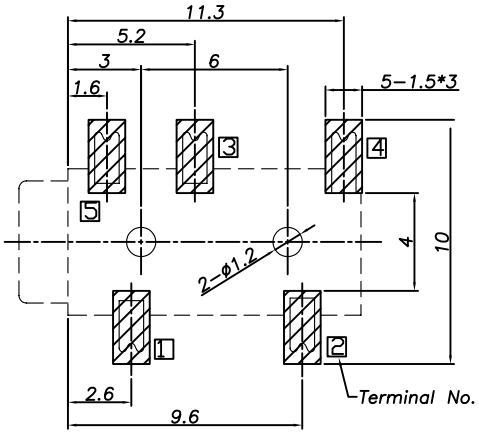

P.C.B Layout
(Copper-sided view)

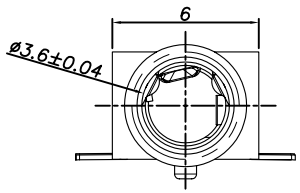

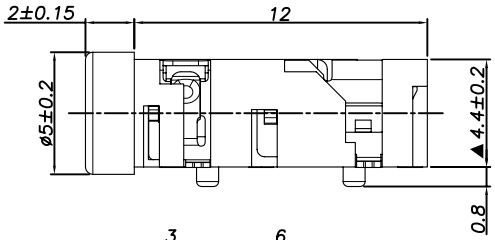

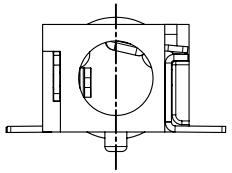

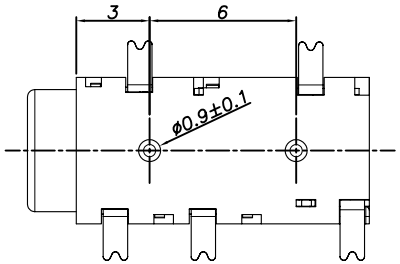

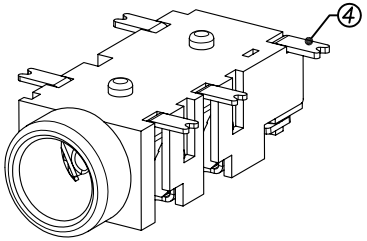

Model No.	PJ-327A-B	PJ-327A-C	PJ-327A-D
Schematic	①② ③② ④④ ②③	①② ④④ ②③	①② ③④ ②③
Model No.	PJ-327A-K	PJ-327A-P	
Schematic	①② ③② ④④ ②③ ⑤②	①② ③② ②③ ⑤②	

□:TERMINAL NO. ○:ITEM NO.

Matching Plug

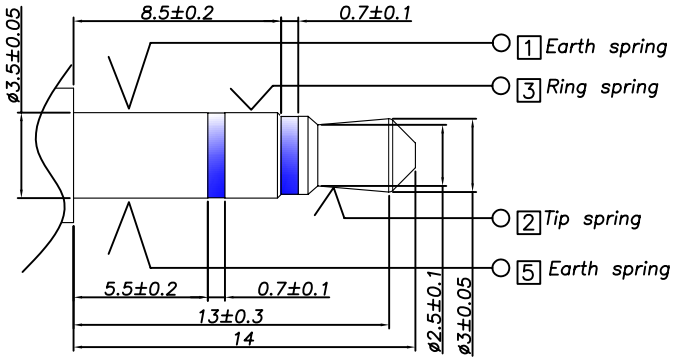

④	Shunt terminal	1	Brass t=0.25	Au-Plating
③	Tip spring	1	Be-cu,t=0.25	Au-Plating
②	Ring spring	3	Bronze,t=0.2	Au-Plating
①	Housing	1	LCP	blask

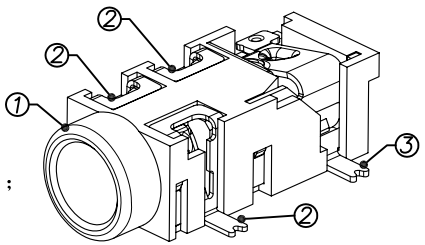

SPECIFICATION
1.Rating ：DC 30V 0.5A；
2.Contact resistance：≤30mΩ；
3.Insulation resistance：≥100MΩ (DC250V)；
4.Withstand voltage：500VAC ；
5.Insertion and extraction force：3-30N;
6.life test：5,000 cycles。

GENERAL TOLERANCE			
SELECT	✓		
DIM. \ TOL.	1	2	3
X.XXX	±0.25	±0.05	±0.15
X.XX		±0.13	±0.25
X.X		±0.25	±0.50
X.		±0.38	±1.00
ANGLE	±2°		

UNITS mm
MAT'L
FINISH
Q'TY

NAME:	JACK
PART NO:	PJ350005203
APPD:	Vicky
CHKD:	Amy
DR:	Linda

ATOM® 深圳市爱特姆科技有限公司 SHENZHEN ATOM TECHNOLOGY CO.,LTD.

TITLE: PJ-327A-P 镀金

DWG NO. ATOM-A00039

SCALE	SHEET	REV
1:1	1/1	A