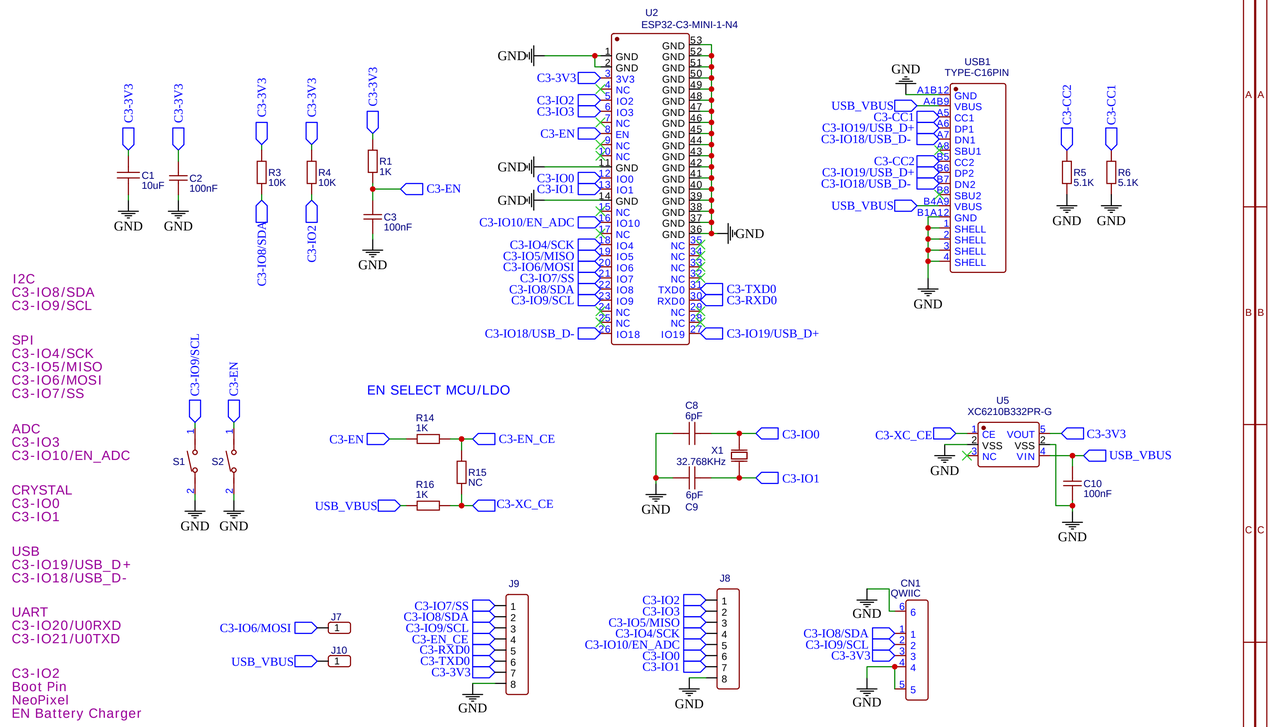

TITLE: Kecik C3 Module
REV: Alpha
Company: TL
Sheet: 1
Date: 2021-10-20 Drawn By: t.lalu

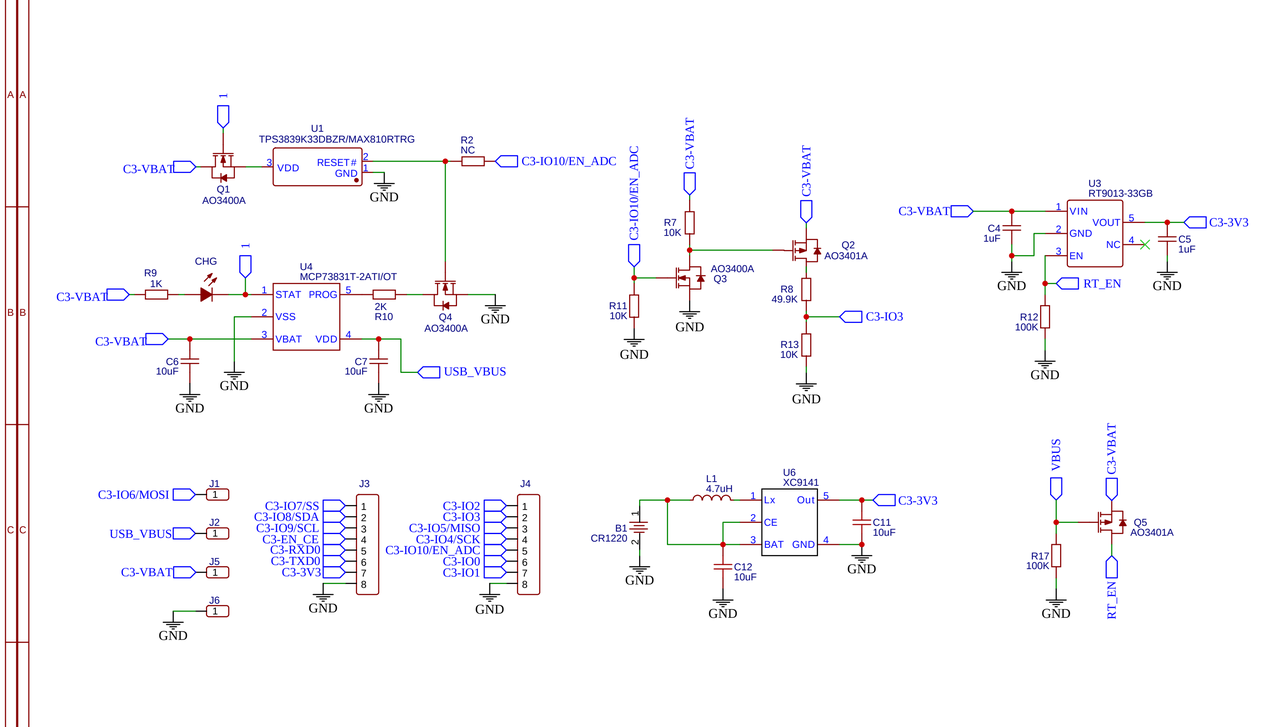

TITLE: Kecik C3 Power
REV: Alpha
Company: TL
Sheet: 1
Date: 2021-10-20 Drawn By: t.lalu

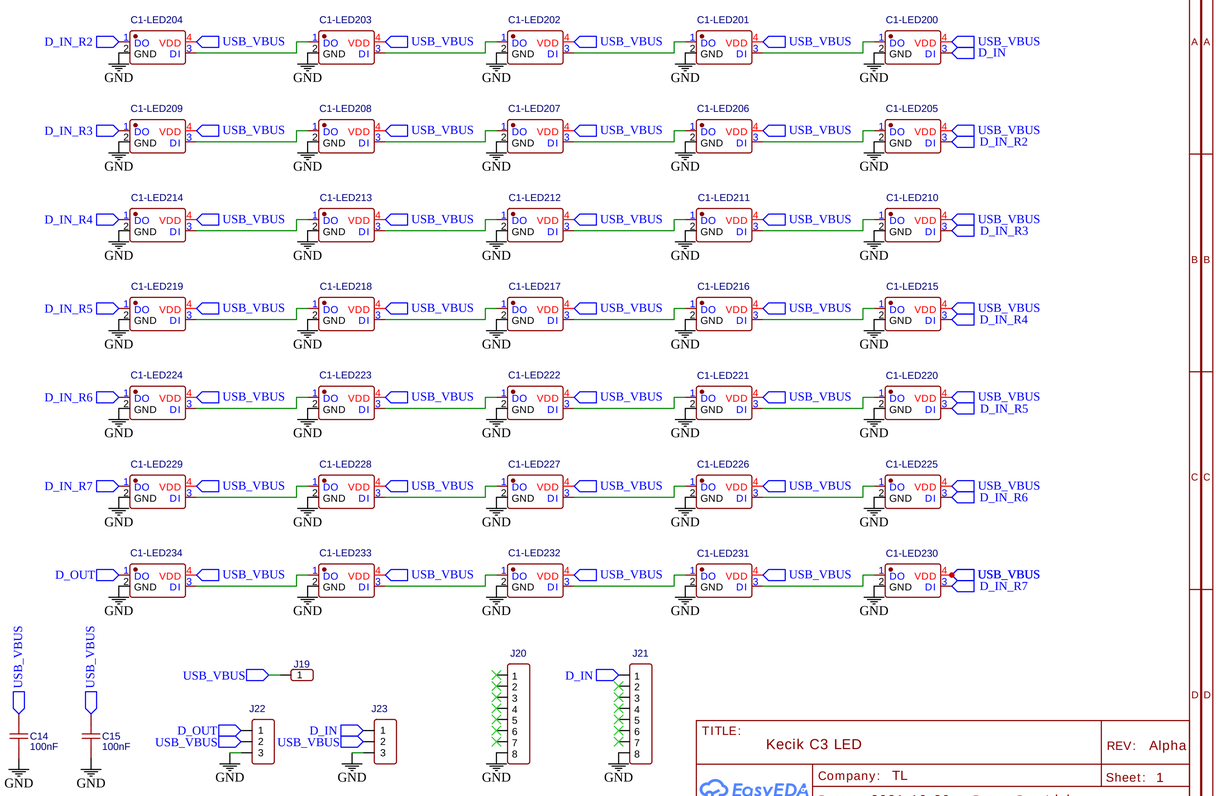

TITLE: Kecik C3 LED
REV: Alpha
Company: TL
Sheet: 1
Date: 2021-10-20 Drawn By: t.lalu

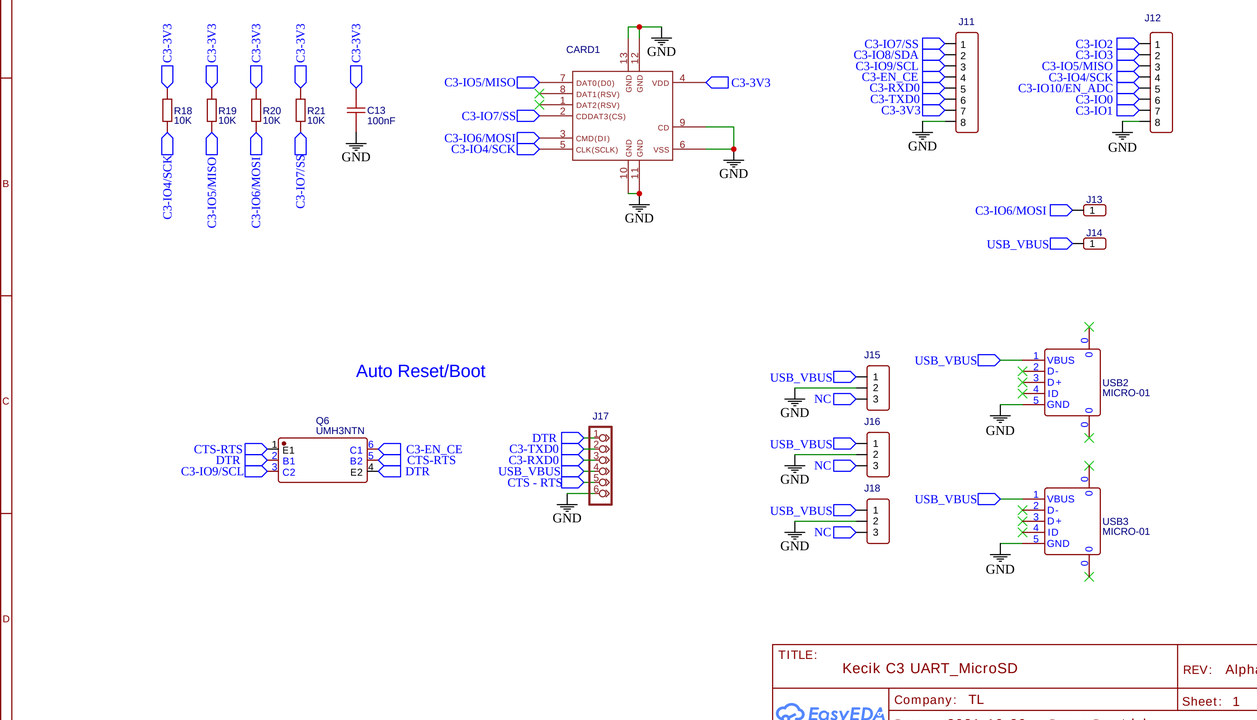

TITLE: Kecik C3 UART_MicroSD
REV: Alpha
Company: TL
Sheet: 1
Date: 2021-10-20 Drawn By: t.lalu