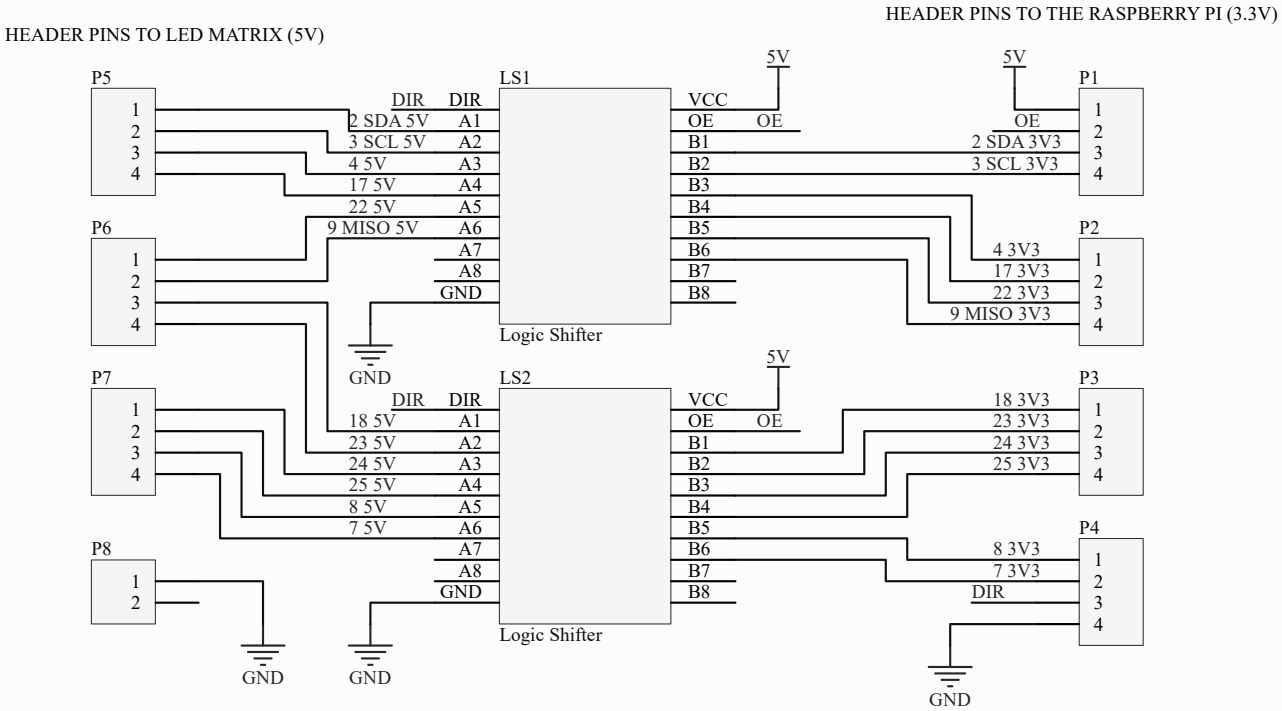

Title	Logic Shifter Schematic	
Size A	Number	Revision B
Date: 3/14/2018		Sheet of
File: C:\Users\..\Logic Shifter.SchDoc		Drawn By: