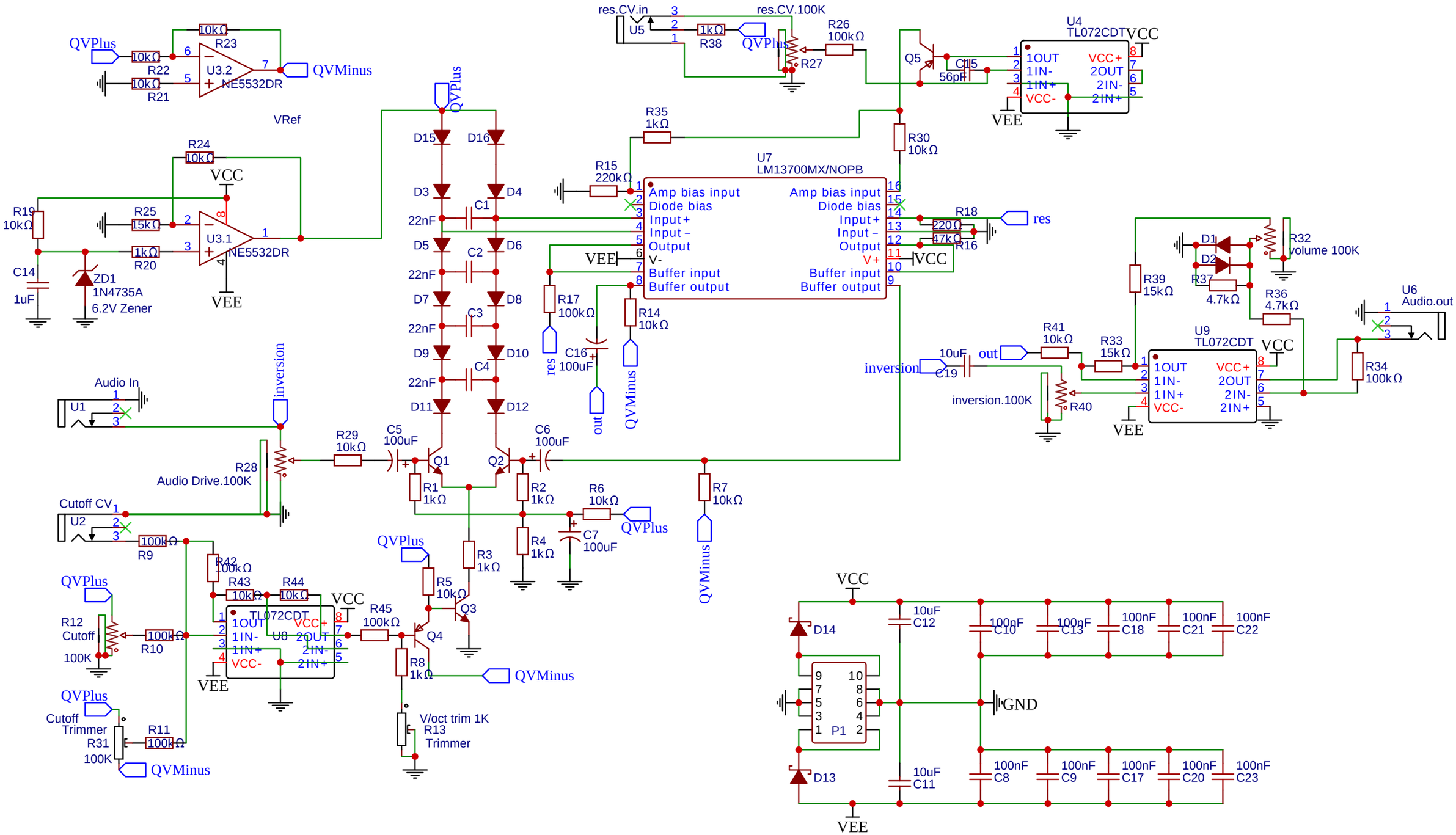

TITLE: MantisLadder		REV: 1.2
EasyEDA	Company: Modular for the Masses	Sheet: 1/1
	Date: 2022-05-29 Drawn By: juanito moore	