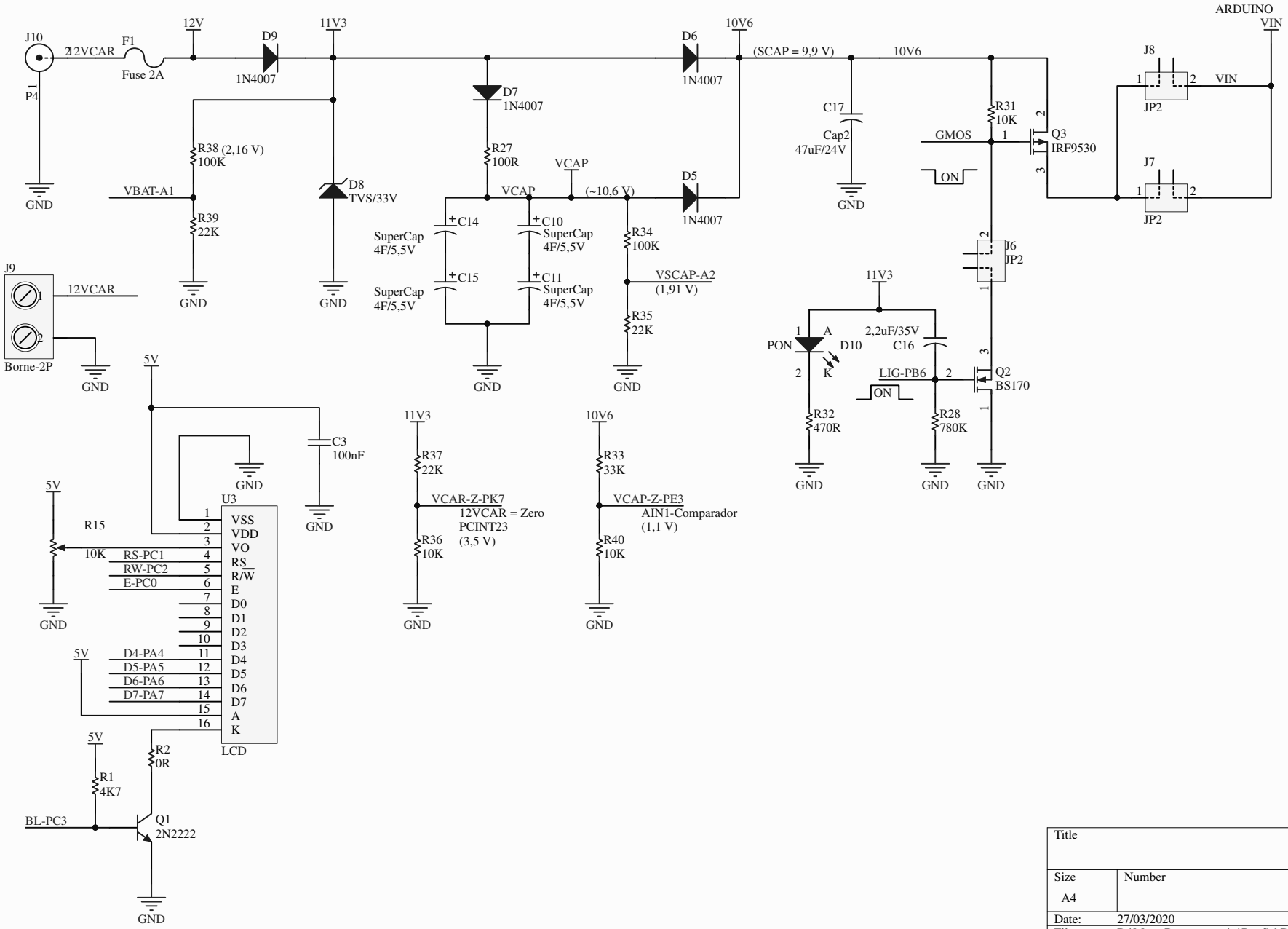


| Title | | |
|---|---|---|
| Size A4 | Number | Revision |
| Date: 27/03/2020 | | Sheet of |
| File: D:\Meus Documentos\..\Pot.SchDoc | | Drawn By: |