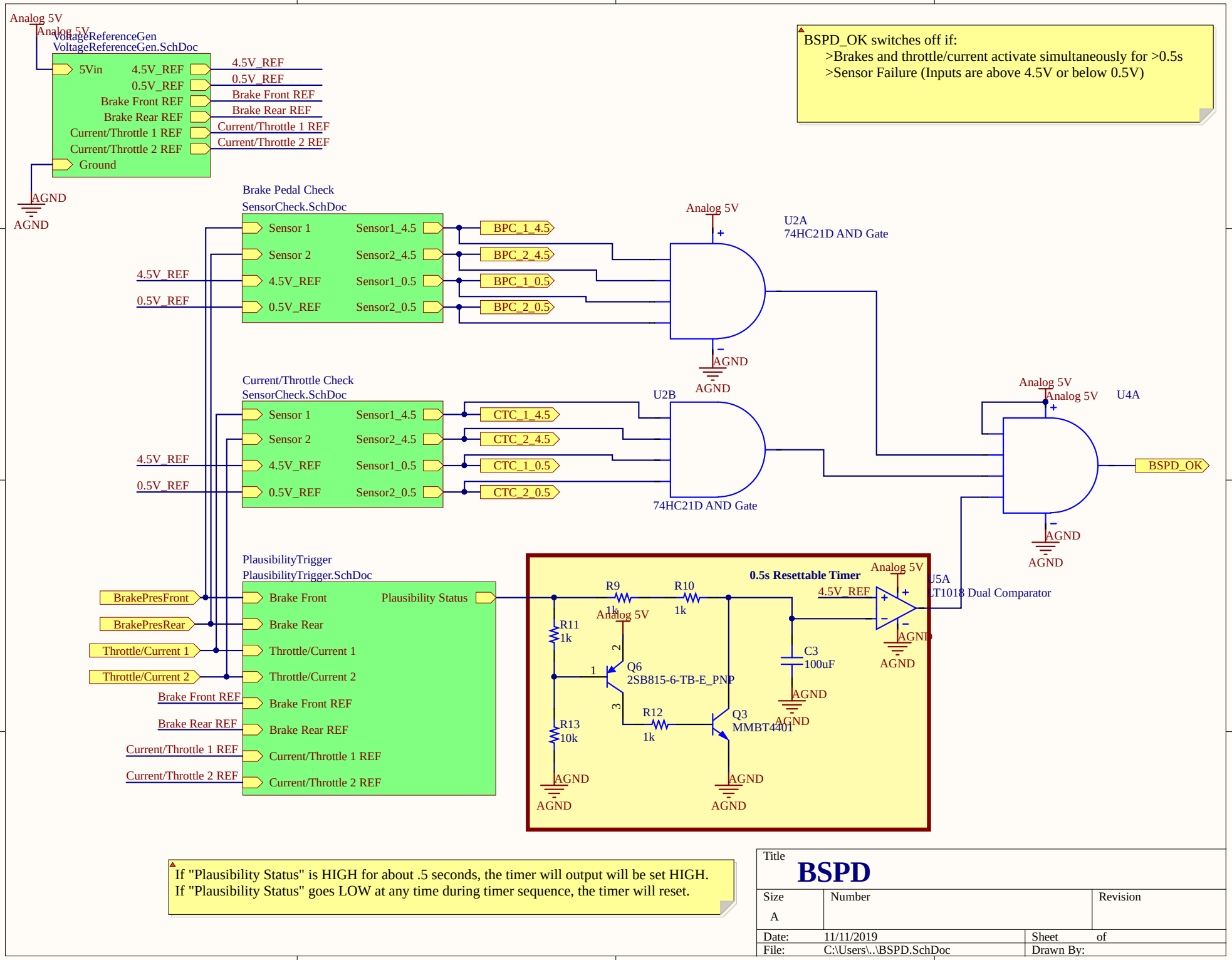
Analog 5V
VoltageReferenceGen
VoltageReferenceGen.SchDoc
5Vin
4.5V_REF
0.5V_REF
Brake Front REF
Brake Rear REF
Current/Throttle 1 REF
Current/Throttle 2 REF
Ground
AGND
BSPD_OK switches off if:
>Brakes and throttle/current activate simultaneously for >0.5s
>Sensor Failure (Inputs are above 4.5V or below 0.5V)
Brake Pedal Check
SensorCheck.SchDoc
Sensor 1
Sensor 2
Sensor1_4.5
Sensor2_4.5
Sensor1_0.5
Sensor2_0.5
BPC_1_4.5
BPC_2_4.5
BPC_1_0.5
BPC_2_0.5
U2A
74HC21D AND Gate
Current/Throttle Check
SensorCheck.SchDoc
CTC_1_4.5
CTC_2_4.5
CTC_1_0.5
CTC_2_0.5
U2B
74HC21D AND Gate
U4A
BSPD_OK
PlausibilityTrigger
PlausibilityTrigger.SchDoc
BrakePresFront
BrakePresRear
Throttle/Current 1
Throttle/Current 2
Brake Front
Brake Rear
Plausibility Status
0.5s Resettable Timer
R9
1k
R10
1k
R11
1k
R13
10k
R12
1k
Q6
2SB815-6-TB-E_PNP
Q3
MMBT4401
C3
100uF
U5A
LT1018 Dual Comparator
If "Plausibility Status" is HIGH for about .5 seconds, the timer will output will be set HIGH.
If "Plausibility Status" goes LOW at any time during timer sequence, the timer will reset.
Title
BSPD
Size
A
Number
Revision
Date: 11/11/2019
Sheet of
File: C:\Users\..\BSPD.SchDoc
Drawn By: