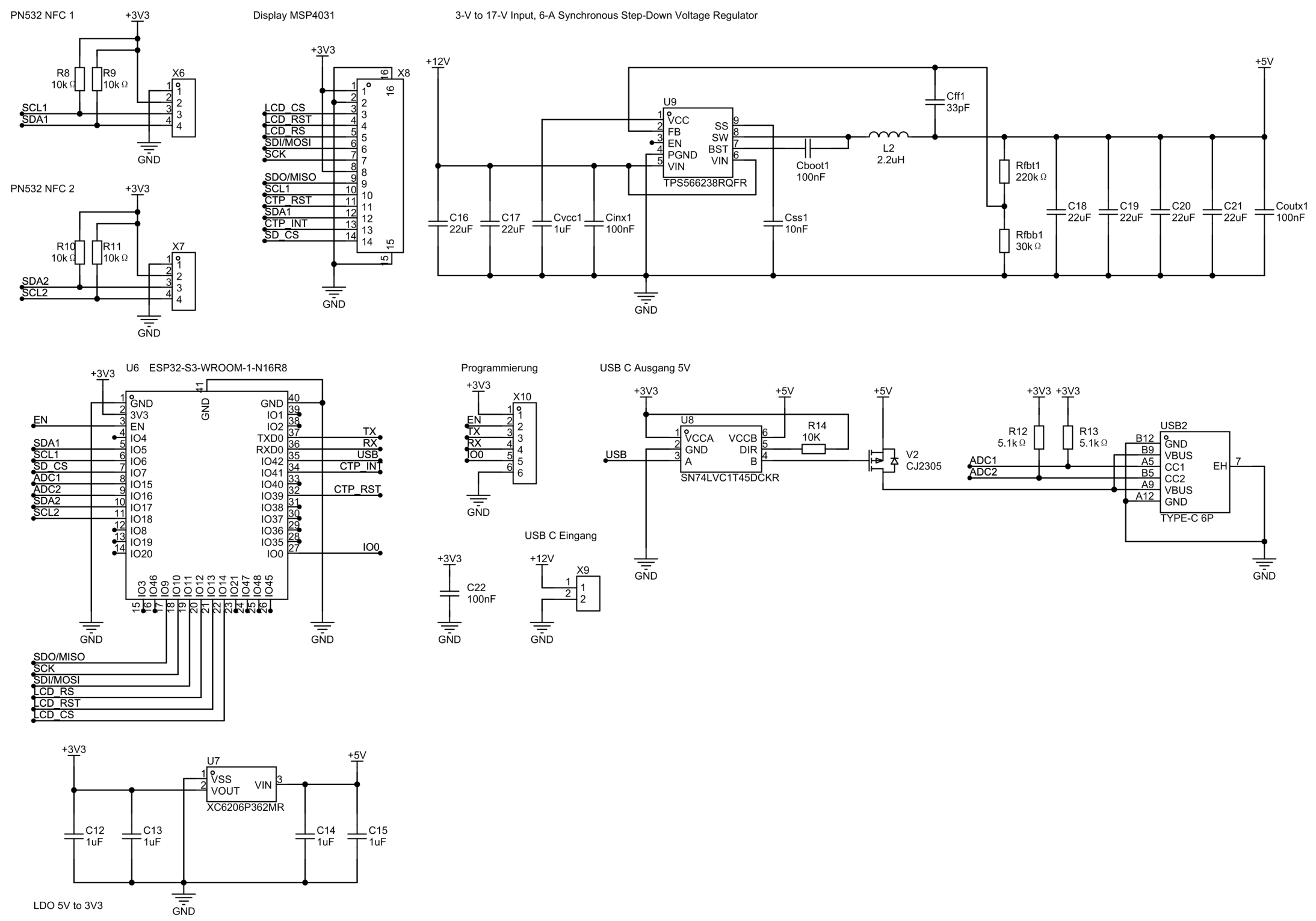
PN532 NFC 1
+3V3
R8
10k Ω
R9
10k Ω
X6
SCL1
SDA1
GND
PN532 NFC 2
+3V3
R10
10k Ω
R11
10k Ω
X7
SDA2
SCL2
GND
Display MSP4031
+3V3
X8
LCD_CS
LCD_RST
LCD_RS
SDI/MOSI
SCK
SDO/MISO
SCL1
CTP_RST
SDA1
CTP_INT
SD_CS
GND
3-V to 17-V Input, 6-A Synchronous Step-Down Voltage Regulator
+12V
U9
VCC
FB
EN
PGND
VIN
SS
SW
BST
VIN
TPS566238RQFR
Cff1
33pF
Cboot1
100nF
L2
2.2uH
Rfbt1
220k Ω
Rfbb1
30k Ω
+5V
C16
22uF
C17
22uF
Cvcc1
1uF
Cinx1
100nF
Css1
10nF
C18
22uF
C19
22uF
C20
22uF
C21
22uF
Coutx1
100nF
GND
U6 ESP32-S3-WROOM-1-N16R8
+3V3
GND
3V3
EN
IO4
IO5
IO6
IO7
IO15
IO16
IO17
IO18
IO8
IO19
IO20
IO1
IO2
TXD0
RXD0
IO42
IO41
IO40
IO39
IO38
IO37
IO36
IO35
IO0
TX
RX
USB
CTP_INT
CTP_RST
IO0
SDO/MISO
SCK
SDI/MOSI
LCD_RS
LCD_RST
LCD_CS
Programmierung
+3V3
X10
EN
TX
RX
IO0
GND
USB C Eingang
+3V3
C22
100nF
+12V
X9
USB C Ausgang 5V
+3V3
+5V
U8
VCCA
GND
A
VCCB
DIR
B
SN74LVC1T45DCKR
R14
10K
USB
V2
CJ2305
R12
5.1k Ω
R13
5.1k Ω
ADC1
ADC2
USB2
B12
B9
A5
B5
A9
A12
GND
VBUS
CC1
CC2
VBUS
GND
EH
TYPE-C 6P
+3V3
U7
VSS
VOUT
VIN
XC6206P362MR
+5V
C12
1uF
C13
1uF
C14
1uF
C15
1uF
LDO 5V to 3V3
GND