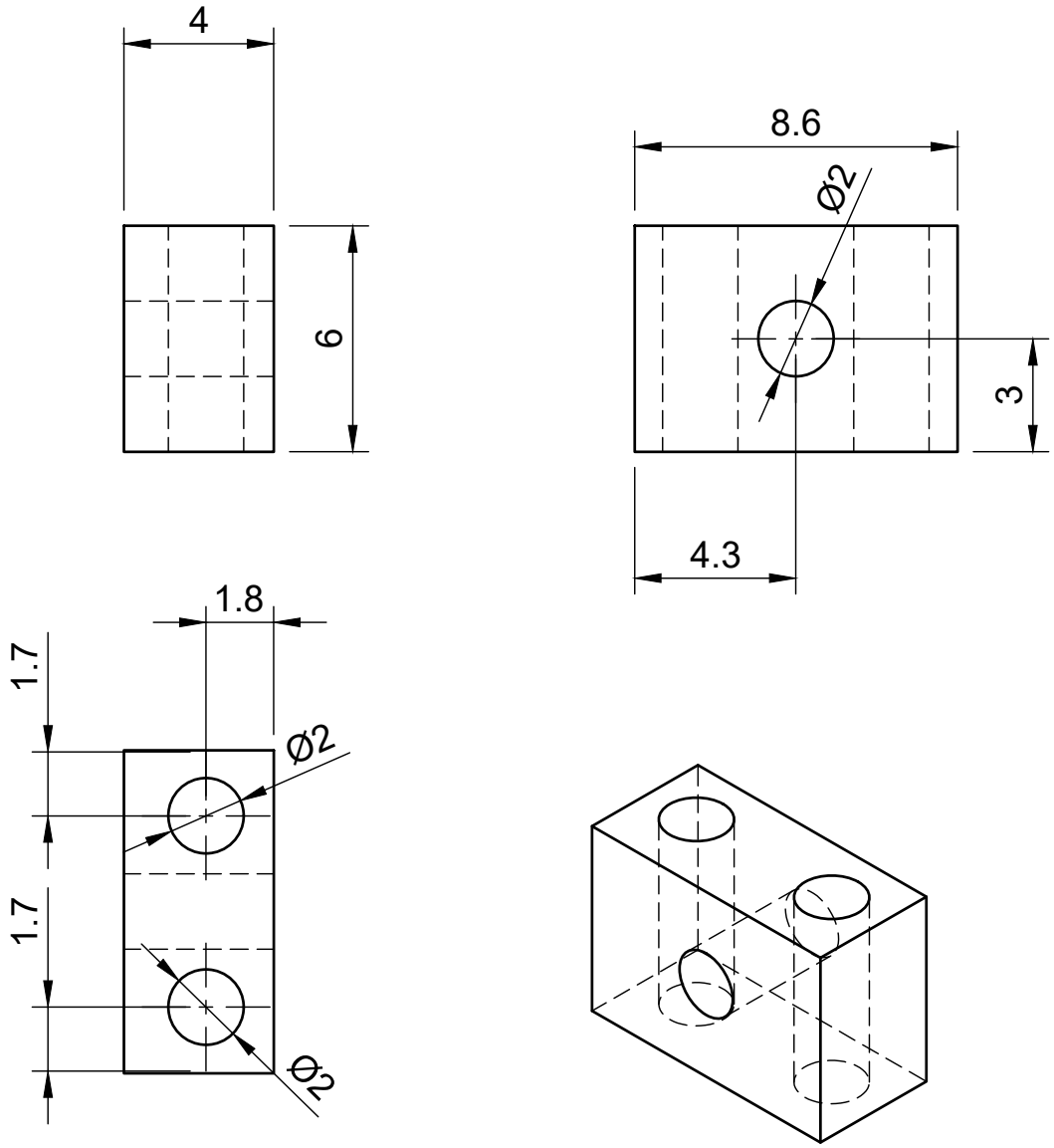

Dept.	Technical reference	Created by Moritz Prodinger 07/01/2026		Approved by	
		Document type		Document status	
		Title Wellenaufhängung hinten		DWG No.	
			Rev.	Date of issue	Sheet 1/2

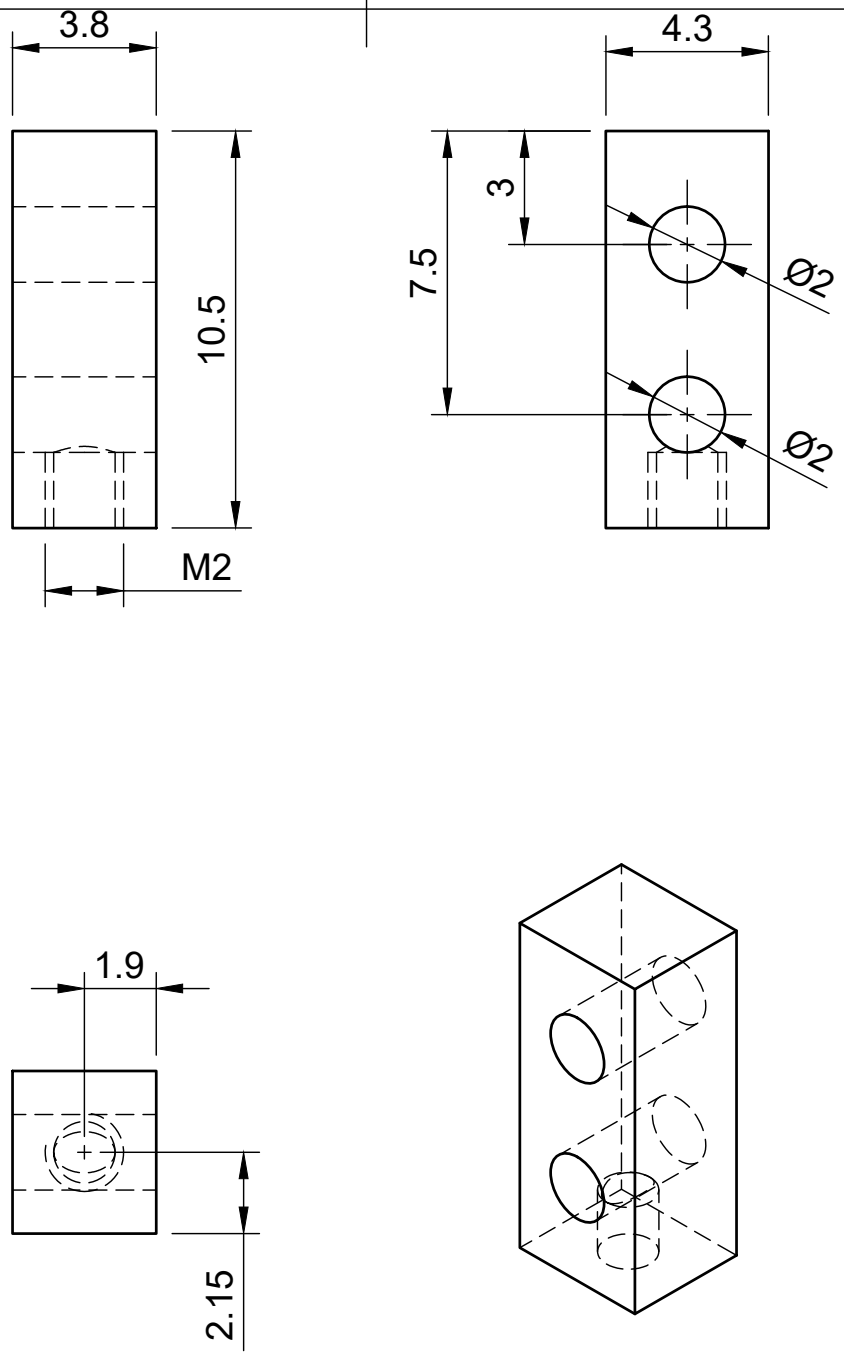

Dept.	Technical reference	Created by Moritz Prodinger 07/01/2026	Approved by		
		Document type	Document status		
		Title Wellenaufhängung vorne	DWG No.		
			Rev.	Date of issue	Sheet 2/2