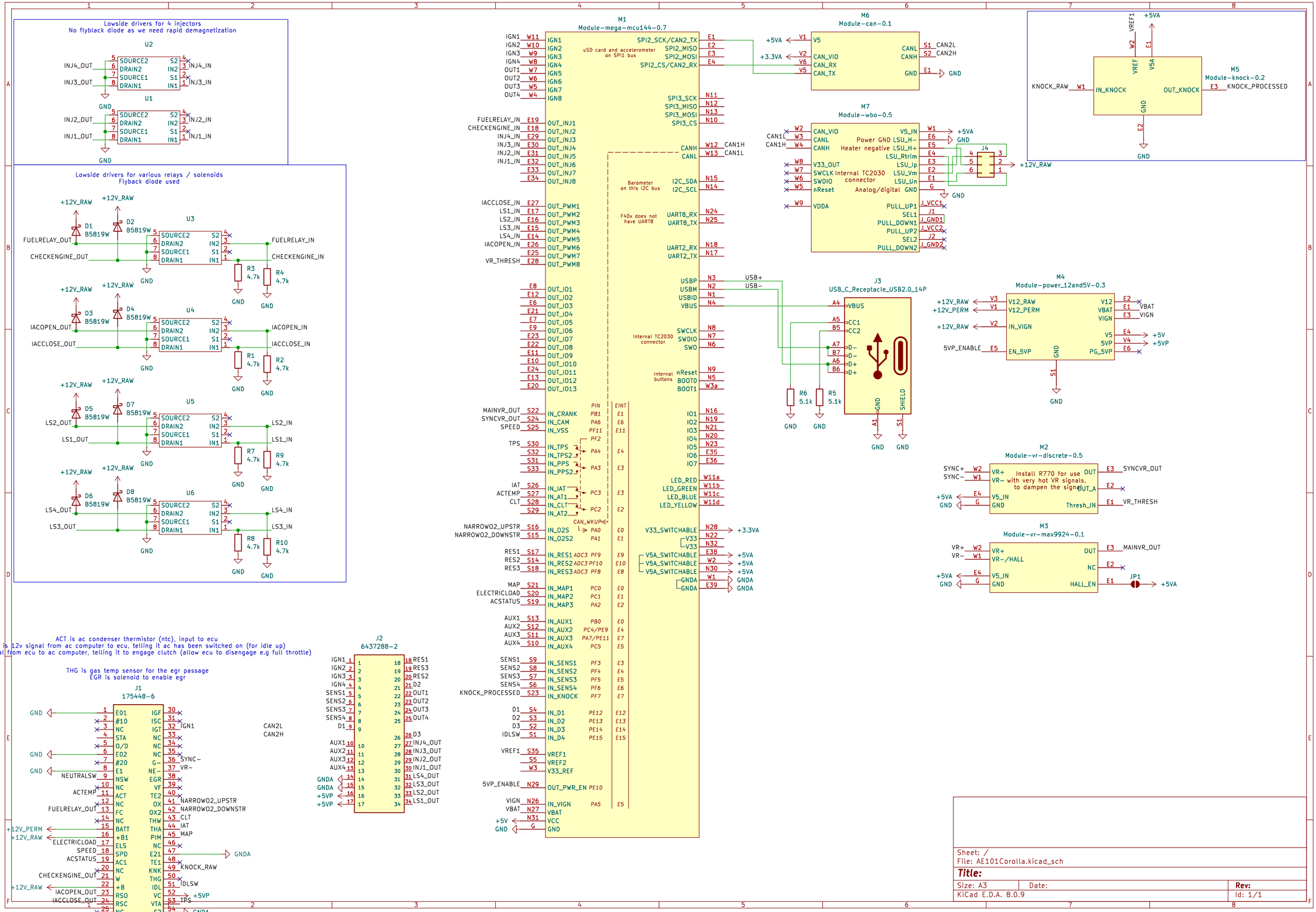
Lowside drivers for 4 injectors
No flyback diode as we need rapid demagnetization
U2
U1
SOURCE2 DRAIN2 SOURCE1 DRAIN1 S2 IN2 S1 IN1
INJ4_OUT INJ3_OUT INJ2_OUT INJ1_OUT
INJ4_IN INJ3_IN INJ2_IN INJ1_IN
GND
Lowside drivers for various relays / solenoids
Flyback diode used
+12V_RAW
D1 B5819W D2 B5819W D3 B5819W D4 B5819W D5 B5819W D7 B5819W D6 B5819W D8 B5819W
U3 U4 U5 U6
FUELRELAY_OUT CHECKENGINE_OUT IACOPEN_OUT IACCLOSE_OUT LS2_OUT LS1_OUT LS4_OUT LS3_OUT
FUELRELAY_IN CHECKENGINE_IN IACOPEN_IN IACCLOSE_IN LS2_IN LS1_IN LS4_IN LS3_IN
R1 4.7k R2 4.7k R3 4.7k R4 4.7k R7 4.7k R9 4.7k R8 4.7k R10 4.7k
M1
Module-mega-mcu144-0.7
uSD card and accelerometer on SPI1 bus
Barometer on this I2C bus
F40x does not have UART8
Internal TC2030 connector
Internal buttons
IGN1 IGN2 IGN3 IGN4 OUT1 OUT2 OUT3 OUT4
FUELRELAY_IN CHECKENGINE_IN INJ4_IN INJ3_IN INJ2_IN INJ1_IN
IACCLOSE_IN LS1_IN LS2_IN LS3_IN LS4_IN IACOPEN_IN VR_THRESH
MAINVR_OUT SYNCVR_OUT SPEED TPS IAT ACTEMP CLT
NARROWO2_UPSTR NARROWO2_DOWNSTR RES1 RES2 RES3 MAP ELECTRICLOAD ACSTATUS AUX1 AUX2 AUX3 AUX4 SENS1 SENS2 SENS3 SENS4 KNOCK_PROCESSED D1 D2 D3 IDLSW VREF1 5VP_ENABLE VIGN VBAT +5V GND
CAN1H CAN1L USB+ USB- CAN_WKUP
V33_SWITCHABLE V5A_SWITCHABLE GNDA
M6
Module-can-0.1
CAN_VIO CANL CANH CAN_RX CAN_TX
+5VA +3.3VA CAN2L CAN2H
M7
Module-wbo-0.5
Power GND Heater negative Internal TC2030 connector Analog/digital
LSU_H- LSU_H+ LSU_Rtrim LSU_Ip LSU_Vm LSU_Un
J4 +12V_RAW
J3
USB_C_Receptacle_USB2.0_14P
VBUS CC1 CC2 D- D+ GND SHIELD
R6 5.1k R5 5.1k
M4
Module-power_12and5V-0.3
V12_RAW V12_PERM IN_VIGN EN_5VP GND V12 VBAT VIGN 5V PG_5VP
+12V_RAW +12V_PERM 5VP_ENABLE VBAT VIGN +5V +5VP
M5
Module-knock-0.2
KNOCK_RAW IN_KNOCK OUT_KNOCK KNOCK_PROCESSED
VREF1 +5VA VREF V5A
M2
Module-vr-discrete-0.5
Install R770 for use with very hot VR signals, to dampen the signal
SYNC+ SYNC- VR+ VR- V5_IN GND OUT_A Thresh_IN
SYNCVR_OUT VR_THRESH
M3
Module-vr-max9924-0.1
VR+ VR-/HALL V5_IN GND OUT NC HALL_EN
MAINVR_OUT JP1
ACT is ac condenser thermistor (ntc), input to ecu
AC1 is 12v signal from ac computer to ecu, telling it ac has been switched on (for idle up)
2 is signal from ecu to ac computer, telling it to engage clutch (allow ecu to disengage e.g full throttle)
THG is gas temp sensor for the egr passage
EGR is solenoid to enable egr
J1
175448-6
E01 #10 NC STA O/D E02 #20 E1 NSW NC ACT NC FC NC BATT +B1 ELS SPD AC1 NC W +B RSO RSC NC NC NC G1
IGF IGT NC NC NC G- NE- EGR VF TE2 OX OX2 THW THA PIM NC E21 TE1 KNK THG IDL VC VTA E2 MH1 MH2 MH3
IGN1 NEUTRALSW ACTEMP FUELRELAY_OUT ELECTRICLOAD SPEED ACSTATUS CHECKENGINE_OUT IACOPEN_OUT IACCLOSE_OUT SYNC+ SYNC- VR- IGN1 CAN2L CAN2H IAT MAP GNDA KNOCK_RAW IDLSW +5VP TPS
J2
6437288-2
IGN1 IGN2 IGN3 IGN4 SENS1 SENS2 SENS3 SENS4 D1 AUX1 AUX2 AUX3 AUX4 GNDA GNDA +5VP +5VP
RES1 RES3 RES2 D2 OUT1 OUT2 OUT3 OUT4 D3 INJ4_OUT INJ3_OUT INJ2_OUT INJ1_OUT LS4_OUT LS3_OUT LS2_OUT LS1_OUT
Sheet: /
File: AE101Corolla.kicad_sch
Title:
Size: A3
Date:
Rev:
KiCad E.D.A. 8.0.9
Id: 1/1