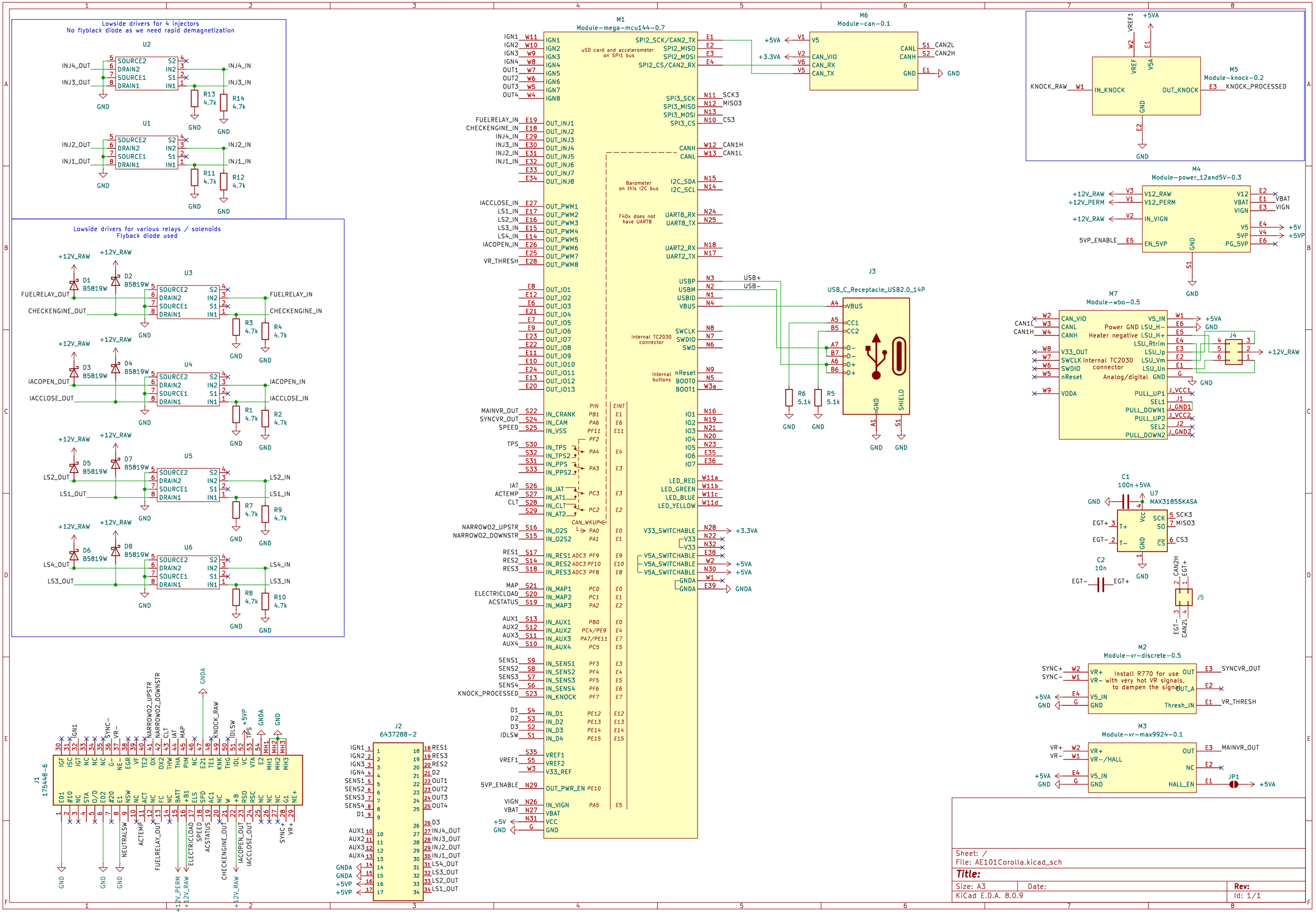
Lowside drivers for 4 injectors
No flyback diode as we need rapid demagnetization
Lowside drivers for various relays / solenoids
Flyback diode used
M1
Module-mega-mcu144-0.7
M6
Module-can-0.1
M5
Module-knock-0.2
M4
Module-power_12and5V-0.3
M7
Module-wbo-0.5
M2
Module-vr-discrete-0.5
M3
Module-vr-max9924-0.1
J3
USB_C_Receptacle_USB2.0_14P
J1
175448-6
J2
6437288-2
U7
MAX31855KASA
Install R770 for use with very hot VR signals, to dampen the signal
Sheet: /
File: AE101Corolla.kicad_sch
Title:
Size: A3
Date:
Rev:
KiCad E.D.A. 8.0.9
Id: 1/1