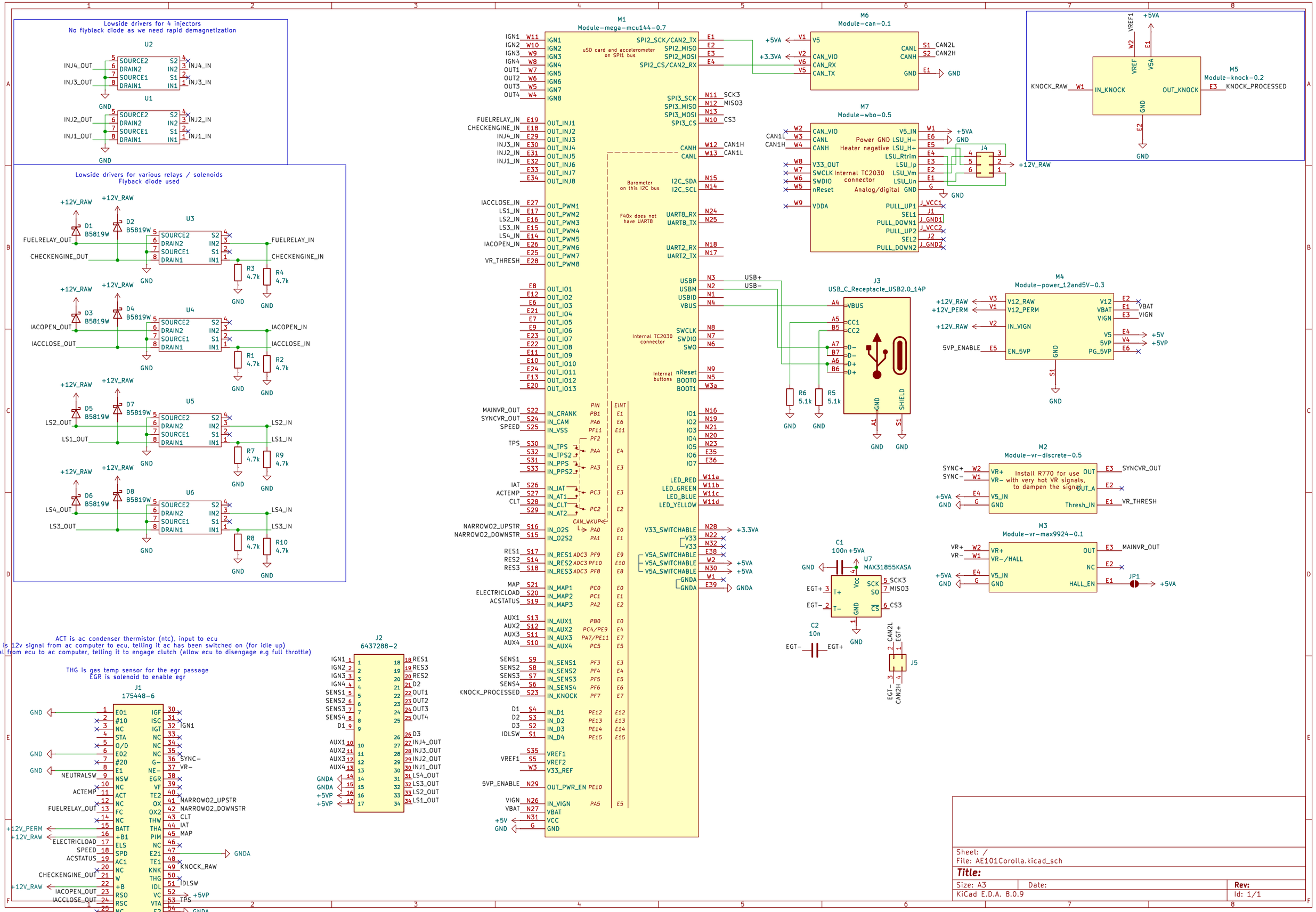
Lowside drivers for 4 injectors
No flyback diode as we need rapid demagnetization
Lowside drivers for various relays / solenoids
Flyback diode used
ACT is ac condenser thermistor (ntc), input to ecu
AC1 is 12v signal from ac computer to ecu, telling it ac has been switched on (for idle up)
2 is signal from ecu to ac computer, telling it to engage clutch (allow ecu to disengage e.g full throttle)
THG is gas temp sensor for the egr passage
EGR is solenoid to enable egr
M1
Module-mega-mcu144-0.7
uSD card and accelerometer on SPI1 bus
Barometer on this I2C bus
F40x does not have UART8
Internal TC2030 connector
Internal buttons
M6
Module-can-0.1
M7
Module-wbo-0.5
Power GND
Heater negative
Internal TC2030 connector
Analog/digital
M5
Module-knock-0.2
J3
USB_C_Receptacle_USB2.0_14P
M4
Module-power_12and5V-0.3
M2
Module-vr-discrete-0.5
Install R770 for use with very hot VR signals, to dampen the signal
M3
Module-vr-max9924-0.1
MAX31855KASA
J2
6437288-2
J1
175448-6
Sheet: /
File: AE101Corolla.kicad_sch
Title:
Size: A3
Date:
Rev:
KiCad E.D.A. 8.0.9
Id: 1/1