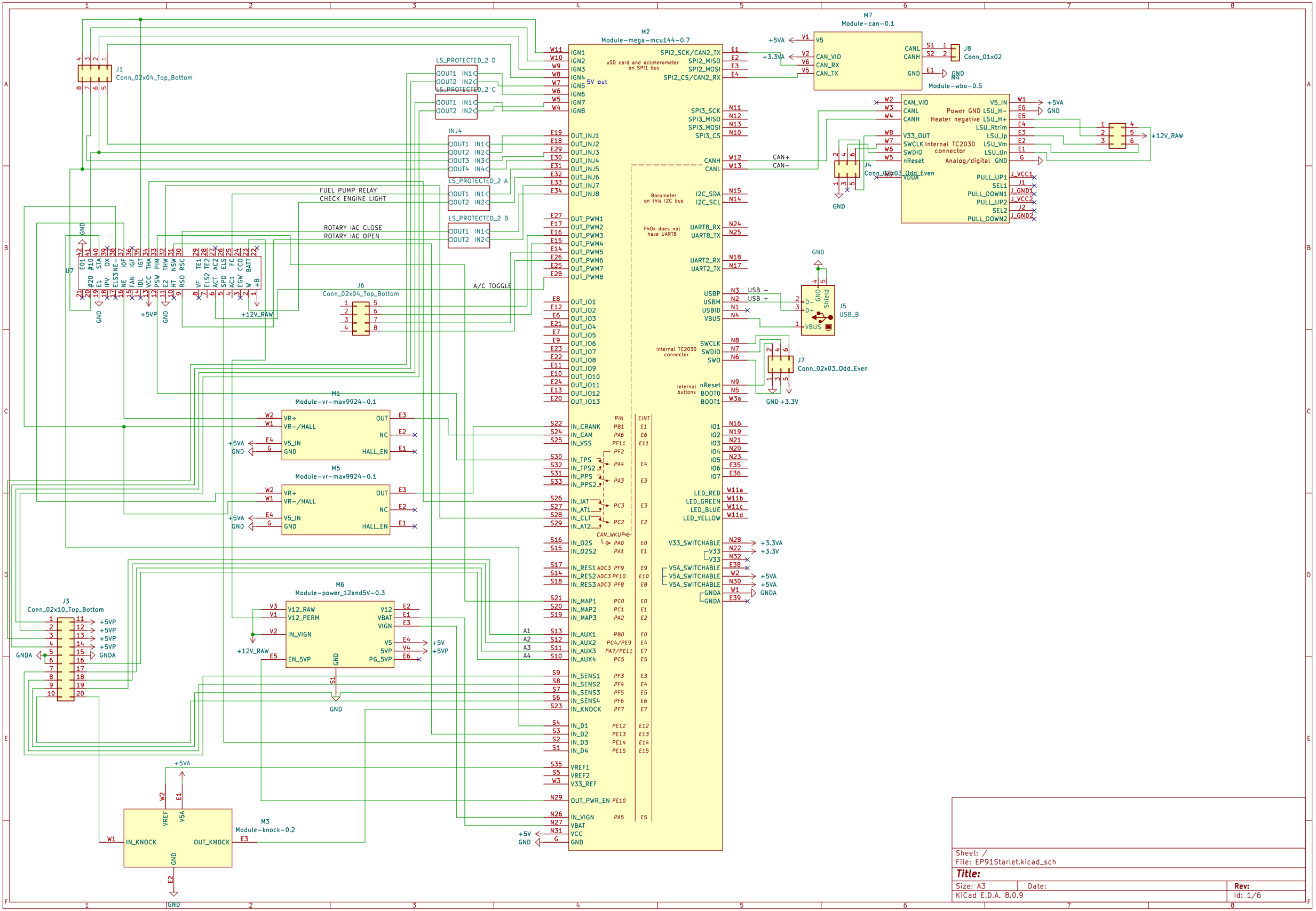

Sheet: /
File: EP91Starlet.kicad_sch

Title:

Size: A3	Date:	Rev:
KiCad E.D.A. 8.0.9		Id: 1/6

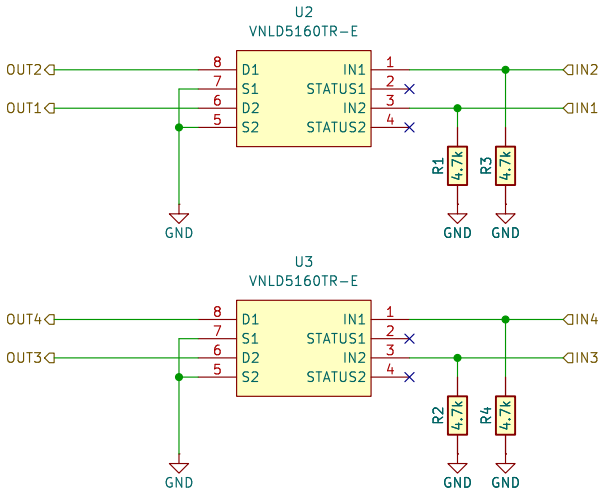

Sheet: /INJ4/
File: INJ4.kicad_sch

Title:

Size: A4	Date:	**Rev:**
KiCad E.D.A. 8.0.9		Id: 2/6

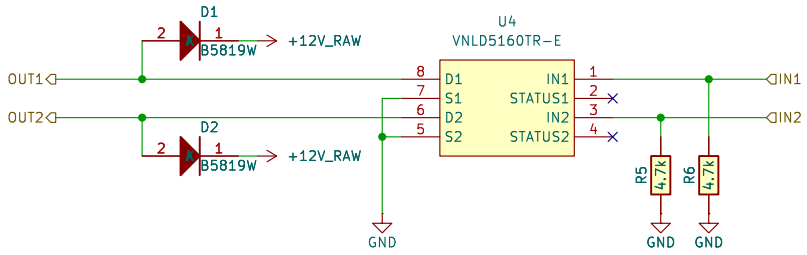

Sheet: /LS_PROTECTED_2 C/
File: LSPROT2.kicad_sch

Title:

Size: A4	Date:	Rev:
KiCad E.D.A. 8.0.9		Id: 3/6

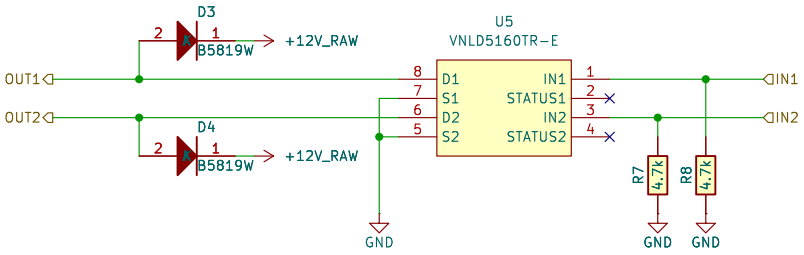

Sheet: /LS_PROTECTED_2 D/
File: LSPROT2.kicad_sch

Title:

Size: A4	Date:	Rev:
KiCad E.D.A. 8.0.9		Id: 4/6

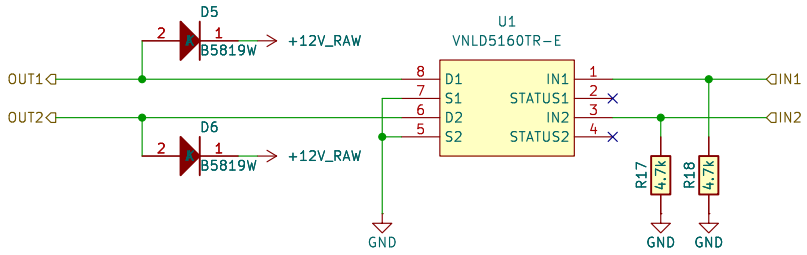

Sheet: /LS_PROTECTED_2 A/
File: LSPROT2.kicad_sch

Title:

Size: A4	Date:	Rev:
KiCad E.D.A. 8.0.9		Id: 6/6

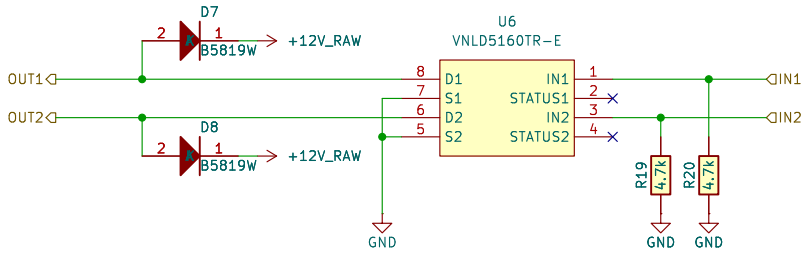

Sheet: /LS_PROTECTED_2 B/
File: LSPROT2.kicad_sch

Title:

Size: A4	Date:	Rev:
KiCad E.D.A. 8.0.9		Id: 7/6

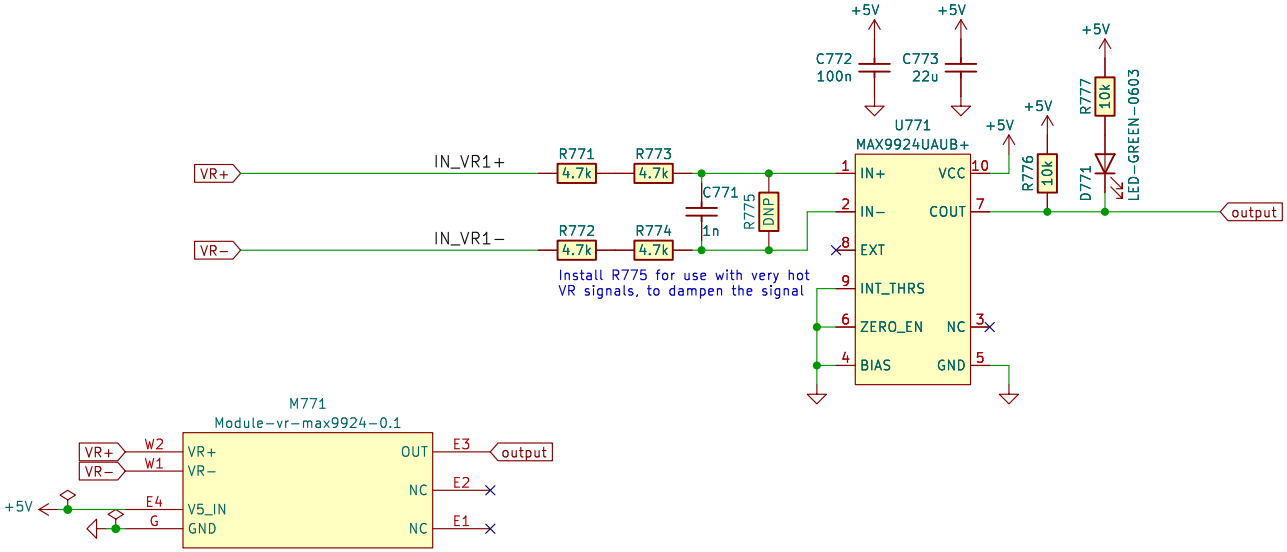

Sheet: /
File: hellen1−vr−max9924.kicad_sch

Title: VR MAX9924 module

Size: A4	Date: 2023−07−25	Rev: 0.1
KiCad E.D.A. eeschema 7.0.9		Id: 1/1

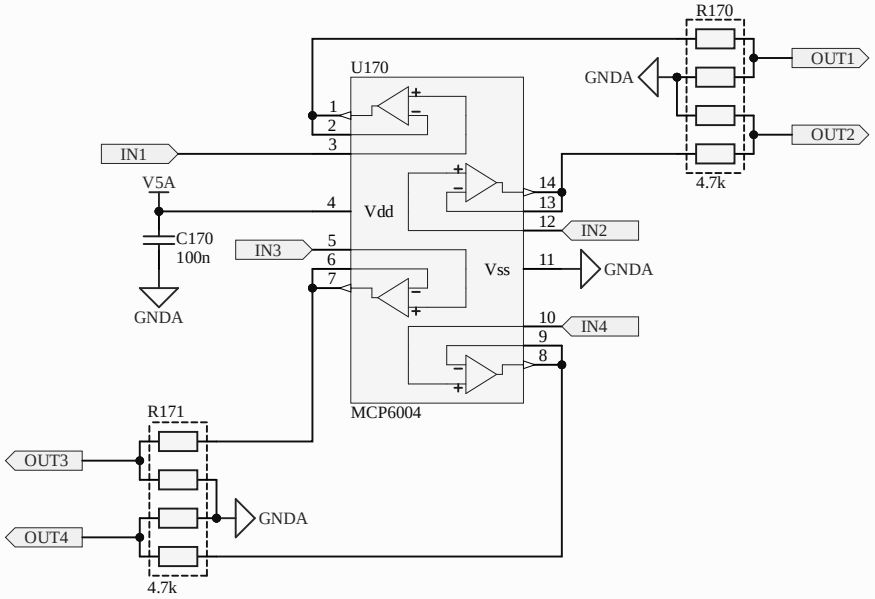
R170
U170
GNDA
OUT1
OUT2
IN1
V5A
4.7k
Vdd
C170
100n
IN3
IN2
Vss
GNDA
GNDA
IN4
MCP6004
R171
OUT3
GNDA
OUT4
4.7k

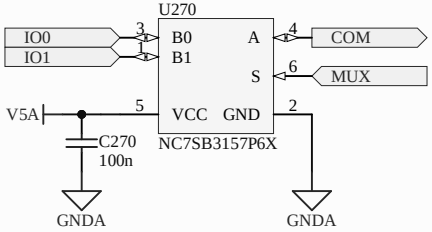
U270
IO0
IO1
3
1
B0
B1
A
S
4
6
COM
MUX
V5A
5
VCC
GND
2
C270
100n
NC7SB3157P6X
GNDA
GNDA

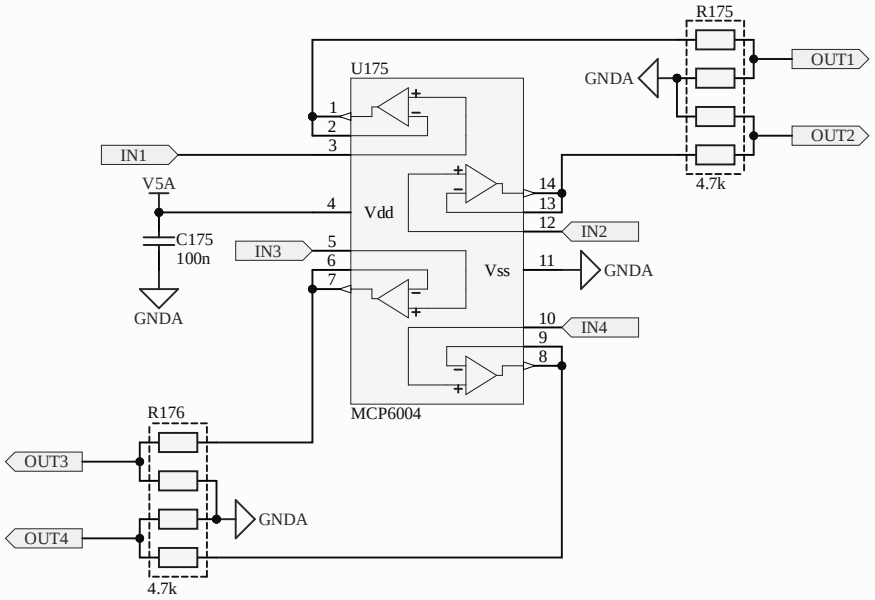
R175
U175
GNDA
OUT1
OUT2
IN1
V5A
4.7k
Vdd
C175
100n
IN3
IN2
Vss
GNDA
GNDA
IN4
MCP6004
R176
OUT3
GNDA
OUT4
4.7k

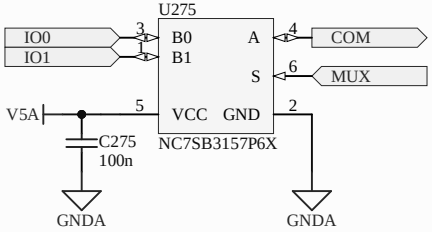
U275
IO0
IO1
3
1
B0
B1
A
S
4
6
COM
MUX
V5A
5
VCC
GND
2
C275
100n
NC7SB3157P6X
GNDA
GNDA

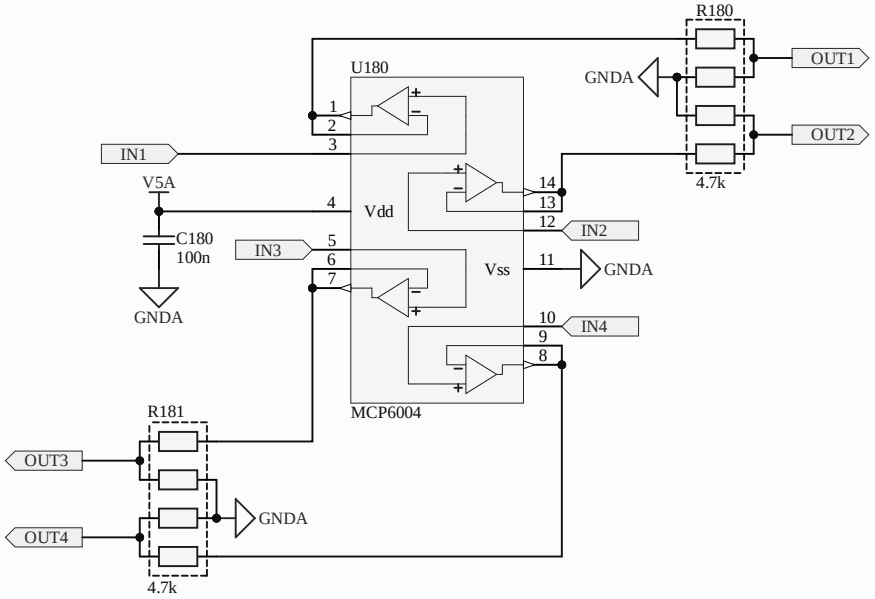
R180
U180
GNDA
OUT1
OUT2
IN1
V5A
4.7k
Vdd
C180
100n
IN3
IN2
Vss
GNDA
GNDA
IN4
MCP6004
R181
OUT3
GNDA
OUT4
4.7k

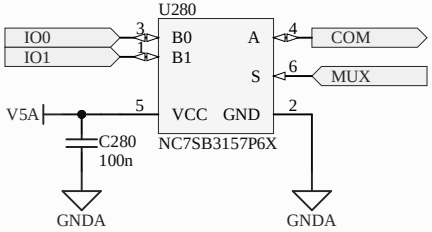
U280
IO0
IO1
3
1
B0
B1
A
S
4
6
COM
MUX
V5A
5
VCC
GND
2
C280
100n
NC7SB3157P6X
GNDA
GNDA

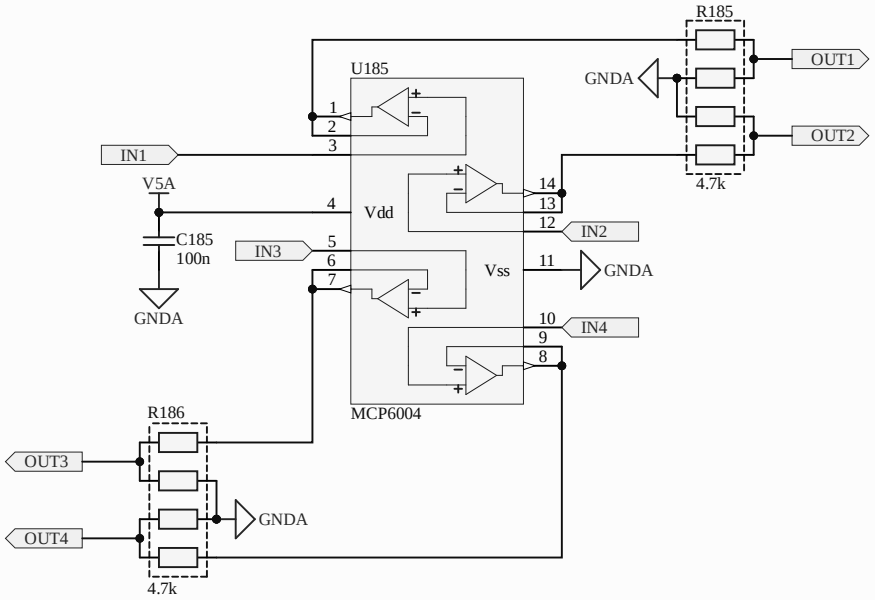
R185
U185
GNDA
OUT1
OUT2
IN1
V5A
4.7k
Vdd
C185
100n
IN3
IN2
Vss
GNDA
GNDA
IN4
MCP6004
R186
OUT3
GNDA
OUT4
4.7k

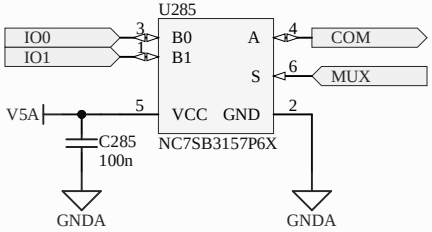
U285
IO0
IO1
3
1
B0
B1
A
S
4
6
COM
MUX
V5A
5
VCC
GND
2
C285
100n
NC7SB3157P6X
GNDA
GNDA

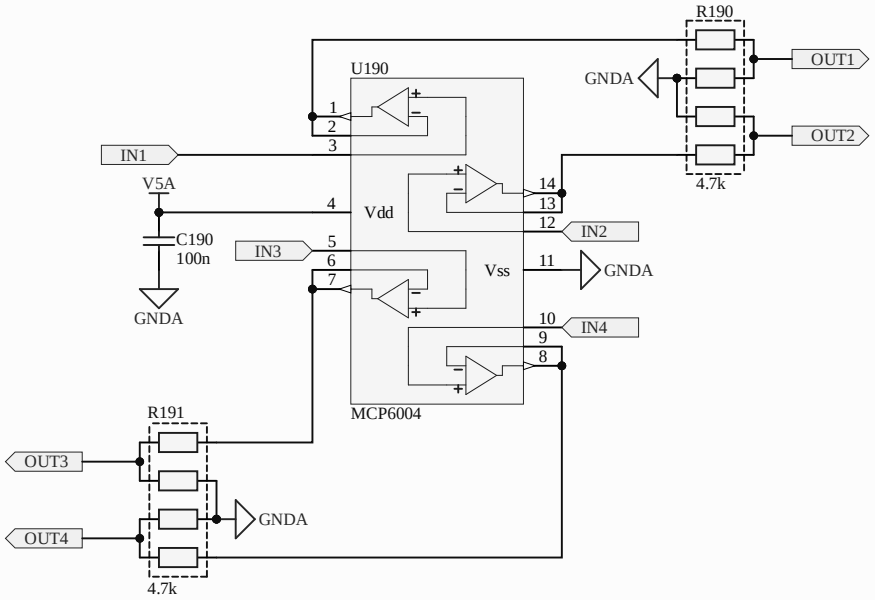
R190
U190
GNDA
OUT1
OUT2
IN1
V5A
C190
100n
GNDA
IN3
Vdd
Vss
IN2
GNDA
IN4
MCP6004
4.7k
R191
OUT3
OUT4
GNDA
4.7k

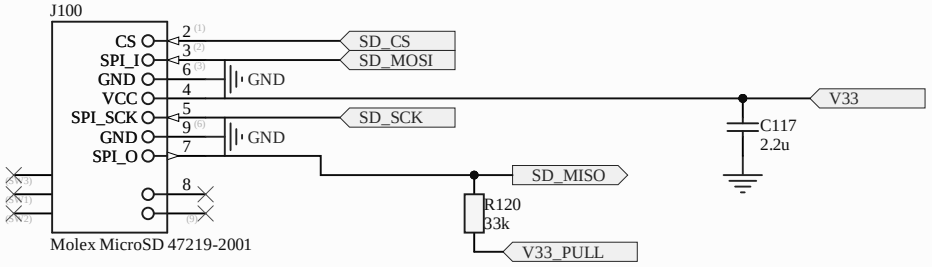
J100
CS
SPI_I
GND
VCC
SPI_SCK
GND
SPI_O
2
3
6
4
5
9
7
8
SD_CS
SD_MOSI
GND
SD_SCK
GND
SD_MISO
V33
C117
2.2u
R120
33k
V33_PULL
Molex MicroSD 47219-2001

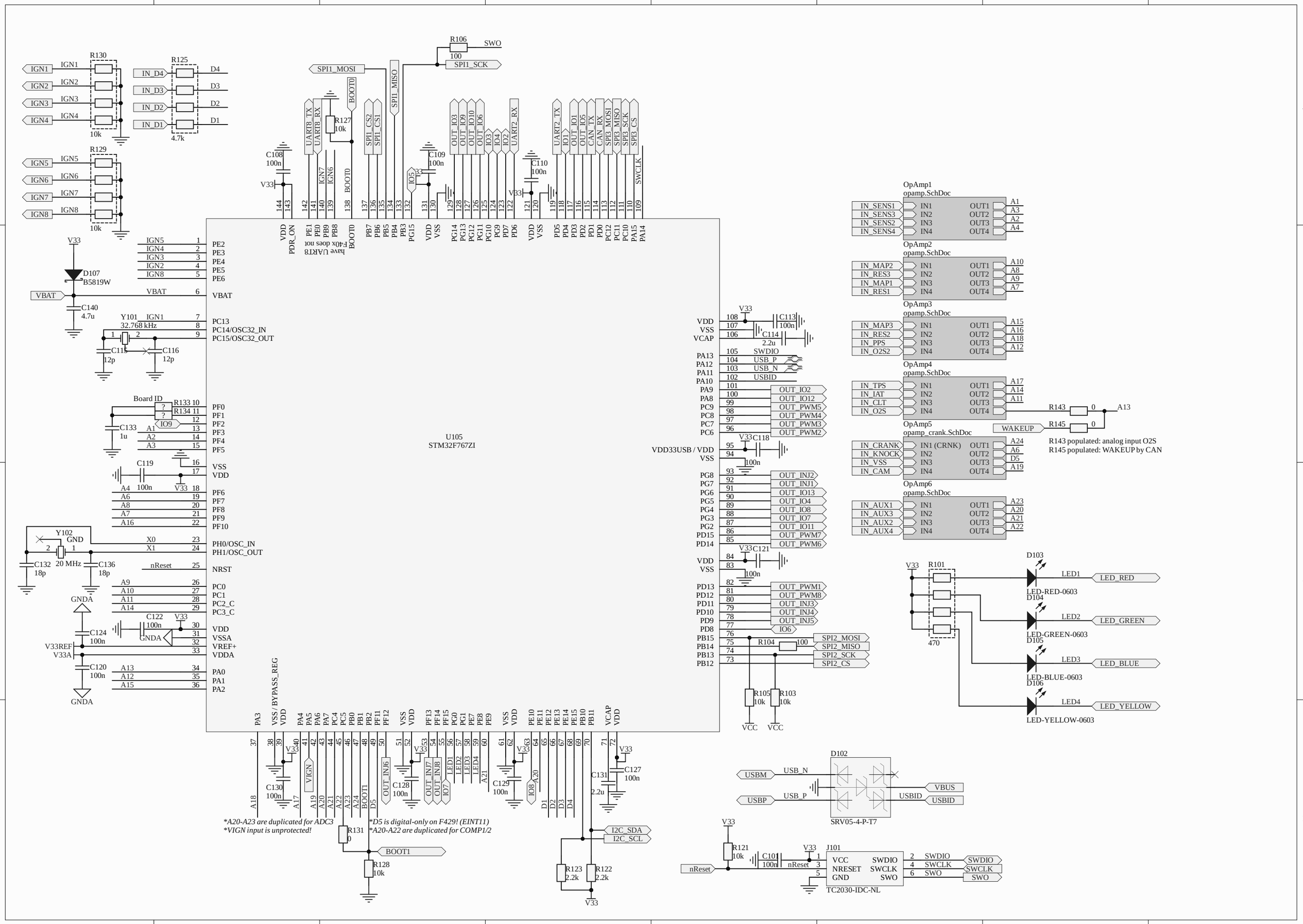
U105
STM32F767ZI
OpAmp1
opamp.SchDoc
OpAmp2
opamp.SchDoc
OpAmp3
opamp.SchDoc
OpAmp4
opamp.SchDoc
OpAmp5
opamp_crank.SchDoc
OpAmp6
opamp.SchDoc
R143 populated: analog input O2S
R145 populated: WAKEUP by CAN
D102
SRV05-4-P-T7
J101
TC2030-IDC-NL
*A20-A23 are duplicated for ADC3
*VIGN input is unprotected!
*D5 is digital-only on F429! (EINT11)
*A20-A22 are duplicated for COMP1/2

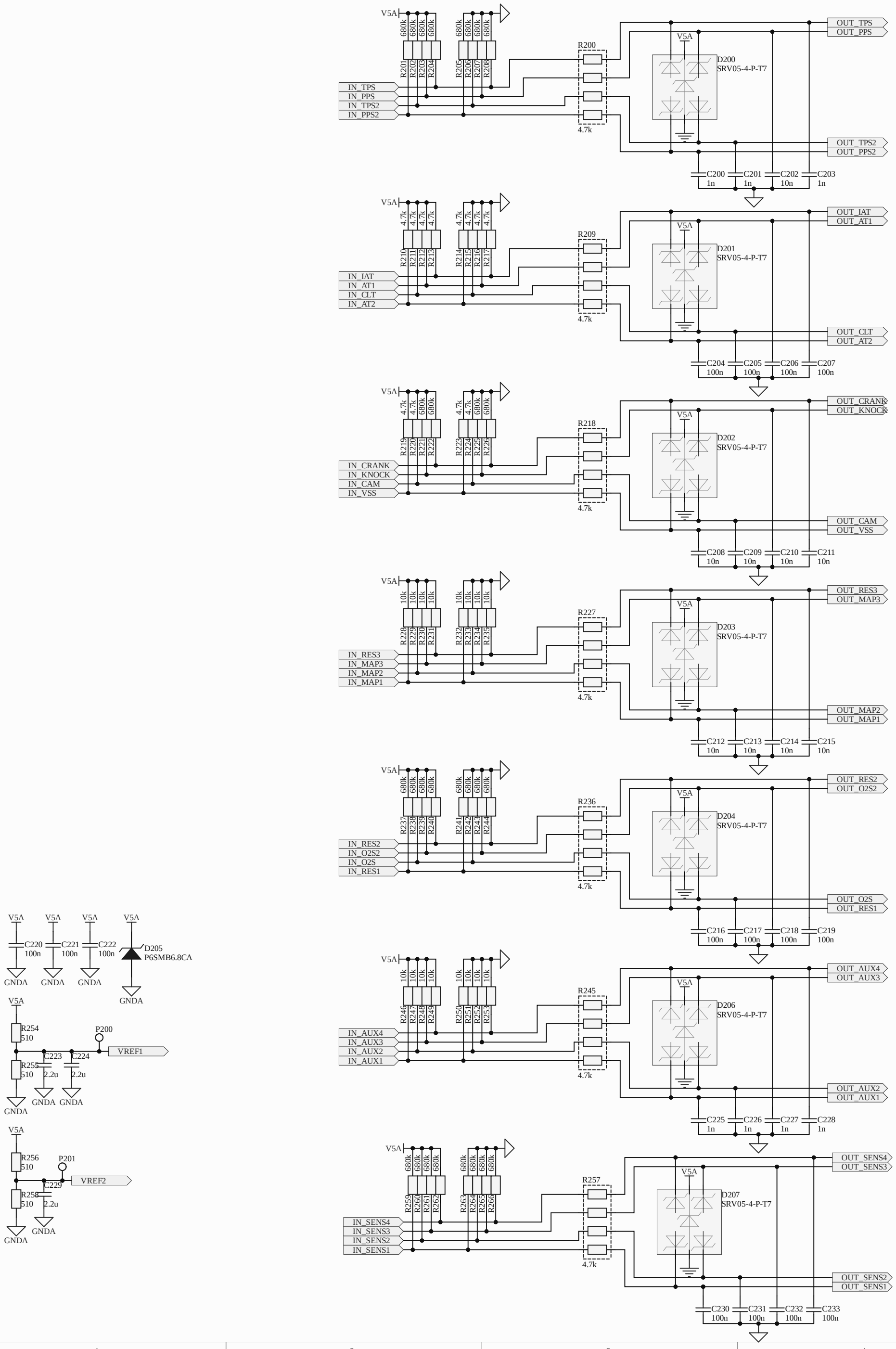
V5A
680k
R201 R202 R203 R204 R205 R206 R207 R208
IN_TPS
IN_PPS
IN_TPS2
IN_PPS2
R200
4.7k
D200
SRV05-4-P-T7
OUT_TPS
OUT_PPS
OUT_TPS2
OUT_PPS2
C200 1n
C201 1n
C202 10n
C203 1n
4.7k
R210 R211 R212 R213 R214 R215 R216 R217
IN_IAT
IN_AT1
IN_CLT
IN_AT2
R209
D201
SRV05-4-P-T7
OUT_IAT
OUT_AT1
OUT_CLT
OUT_AT2
C204 100n
C205 100n
C206 100n
C207 100n
680k
R219 R220 R221 R222 R223 R224 R225 R226
IN_CRANK
IN_KNOCK
IN_CAM
IN_VSS
R218
D202
SRV05-4-P-T7
OUT_CRANK
OUT_KNOCK
OUT_CAM
OUT_VSS
C208 10n
C209 10n
C210 10n
C211 10n
10k
R228 R229 R230 R231 R232 R233 R234 R235
IN_RES3
IN_MAP3
IN_MAP2
IN_MAP1
R227
D203
SRV05-4-P-T7
OUT_RES3
OUT_MAP3
OUT_MAP2
OUT_MAP1
C212 10n
C213 10n
C214 10n
C215 10n
R237 R238 R239 R240 R241 R242 R243 R244
IN_RES2
IN_O2S2
IN_O2S
IN_RES1
R236
D204
SRV05-4-P-T7
OUT_RES2
OUT_O2S2
OUT_O2S
OUT_RES1
C216 100n
C217 100n
C218 100n
C219 100n
R246 R247 R248 R249 R250 R251 R252 R253
IN_AUX4
IN_AUX3
IN_AUX2
IN_AUX1
R245
D206
SRV05-4-P-T7
OUT_AUX4
OUT_AUX3
OUT_AUX2
OUT_AUX1
C225 1n
C226 1n
C227 1n
C228 1n
R259 R260 R261 R262 R263 R264 R265 R266
IN_SENS4
IN_SENS3
IN_SENS2
IN_SENS1
R257
D207
SRV05-4-P-T7
OUT_SENS4
OUT_SENS3
OUT_SENS2
OUT_SENS1
C230 100n
C231 100n
C232 100n
C233 100n
C220 100n
C221 100n
C222 100n
D205
P6SMB6.8CA
GNDA
R254 510
R255 510
P200
VREF1
C223 2.2u
C224 2.2u
R256 510
R258 510
P201
VREF2
C229 2.2u

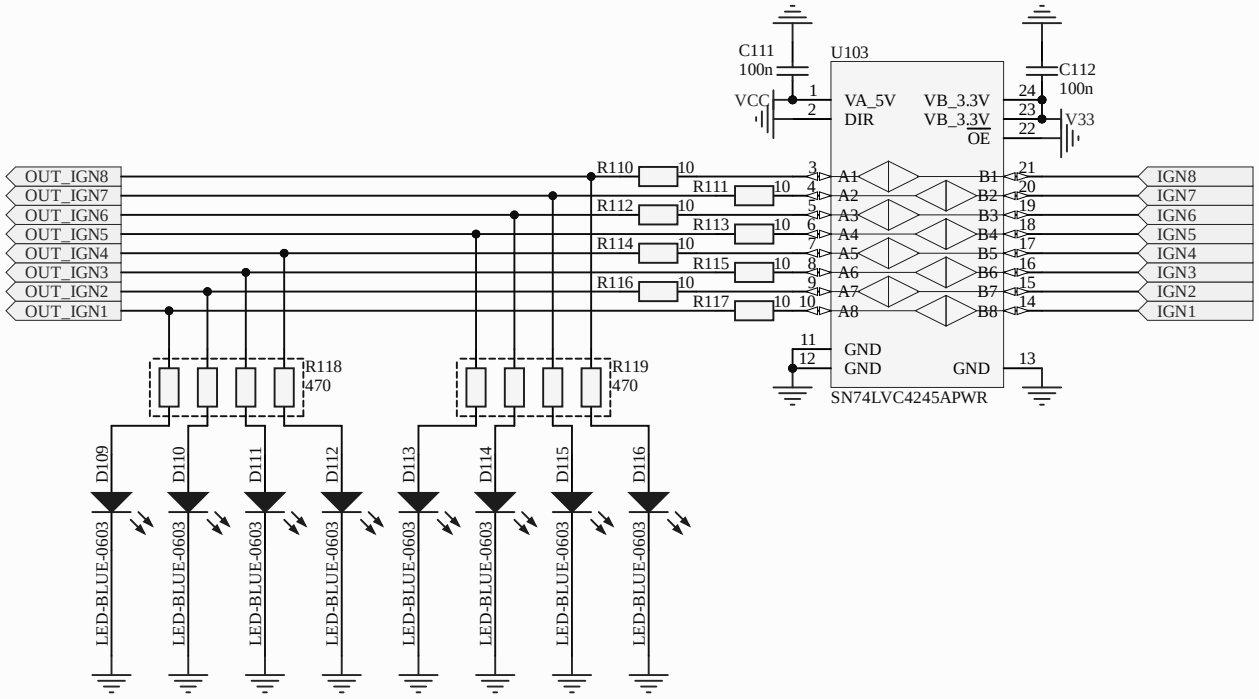
U103
C111
100n
C112
100n
VCC
V33
VA_5V
DIR
VB_3.3V
VB_3.3V
OE
GND
GND
GND
SN74LVC4245APWR
OUT_IGN8
OUT_IGN7
OUT_IGN6
OUT_IGN5
OUT_IGN4
OUT_IGN3
OUT_IGN2
OUT_IGN1
IGN8
IGN7
IGN6
IGN5
IGN4
IGN3
IGN2
IGN1
R110
R111
R112
R113
R114
R115
R116
R117
R118
470
R119
470
D109
D110
D111
D112
D113
D114
D115
D116
LED-BLUE-0603

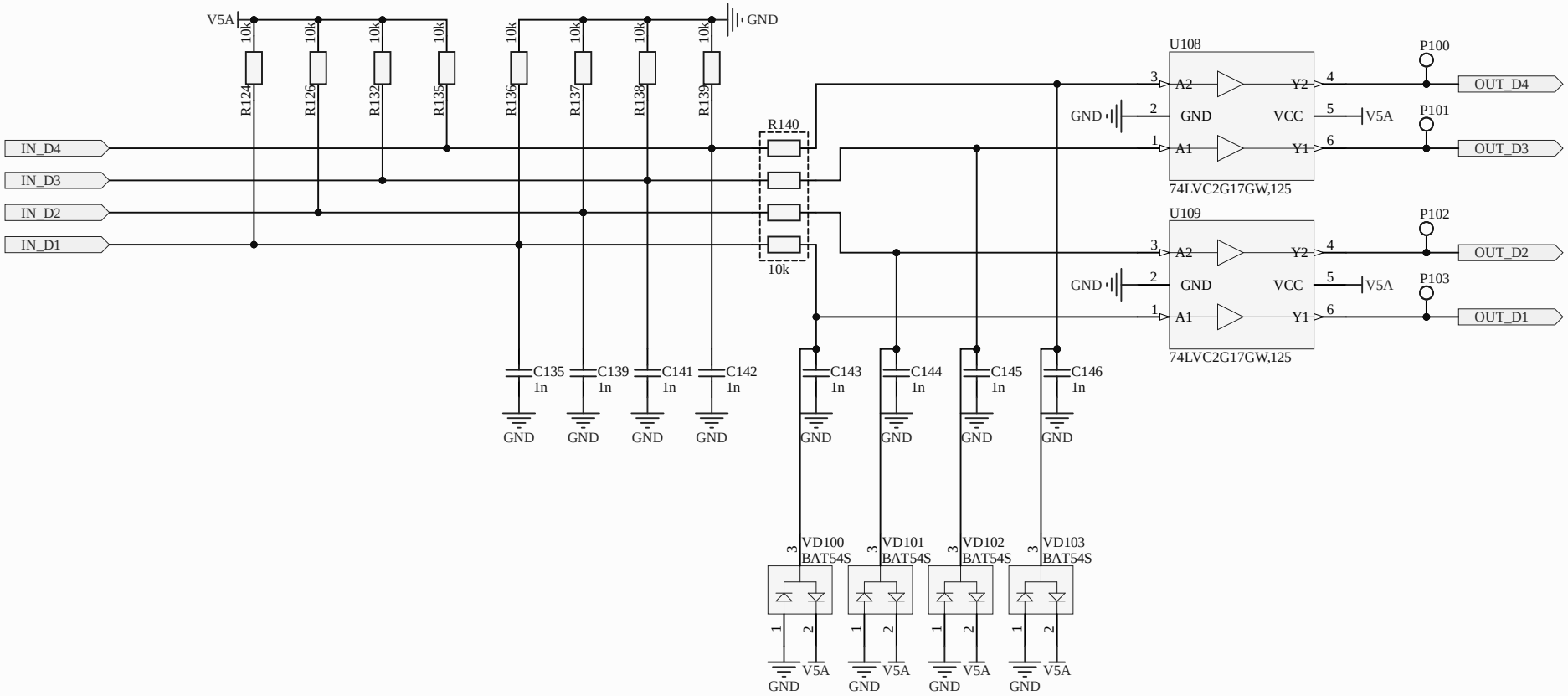
V5A
GND
10k
R124
R126
R132
R135
R136
R137
R138
R139
R140
IN_D4
IN_D3
IN_D2
IN_D1
U108
U109
A2
A1
GND
VCC
Y2
Y1
74LVC2G17GW,125
P100
P101
P102
P103
OUT_D4
OUT_D3
OUT_D2
OUT_D1
C135
C139
C141
C142
C143
C144
C145
C146
1n
VD100
VD101
VD102
VD103
BAT54S

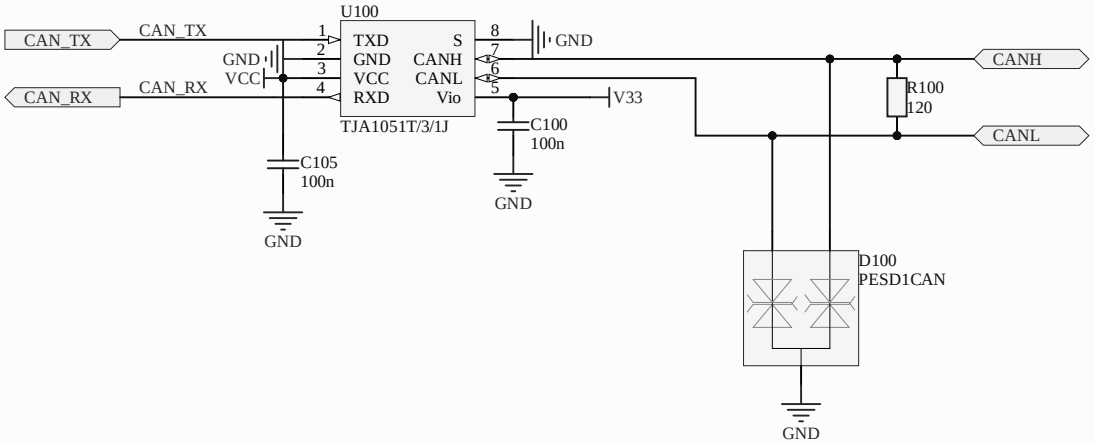
U100
CAN_TX
CAN_TX
CAN_RX
CAN_RX
GND
VCC
1
2
3
4
TXD
GND
VCC
RXD
S
CANH
CANL
Vio
8
7
6
5
GND
V33
TJA1051T/3/1J
C100
100n
GND
C105
100n
GND
CANH
CANL
R100
120
D100
PESD1CAN
GND

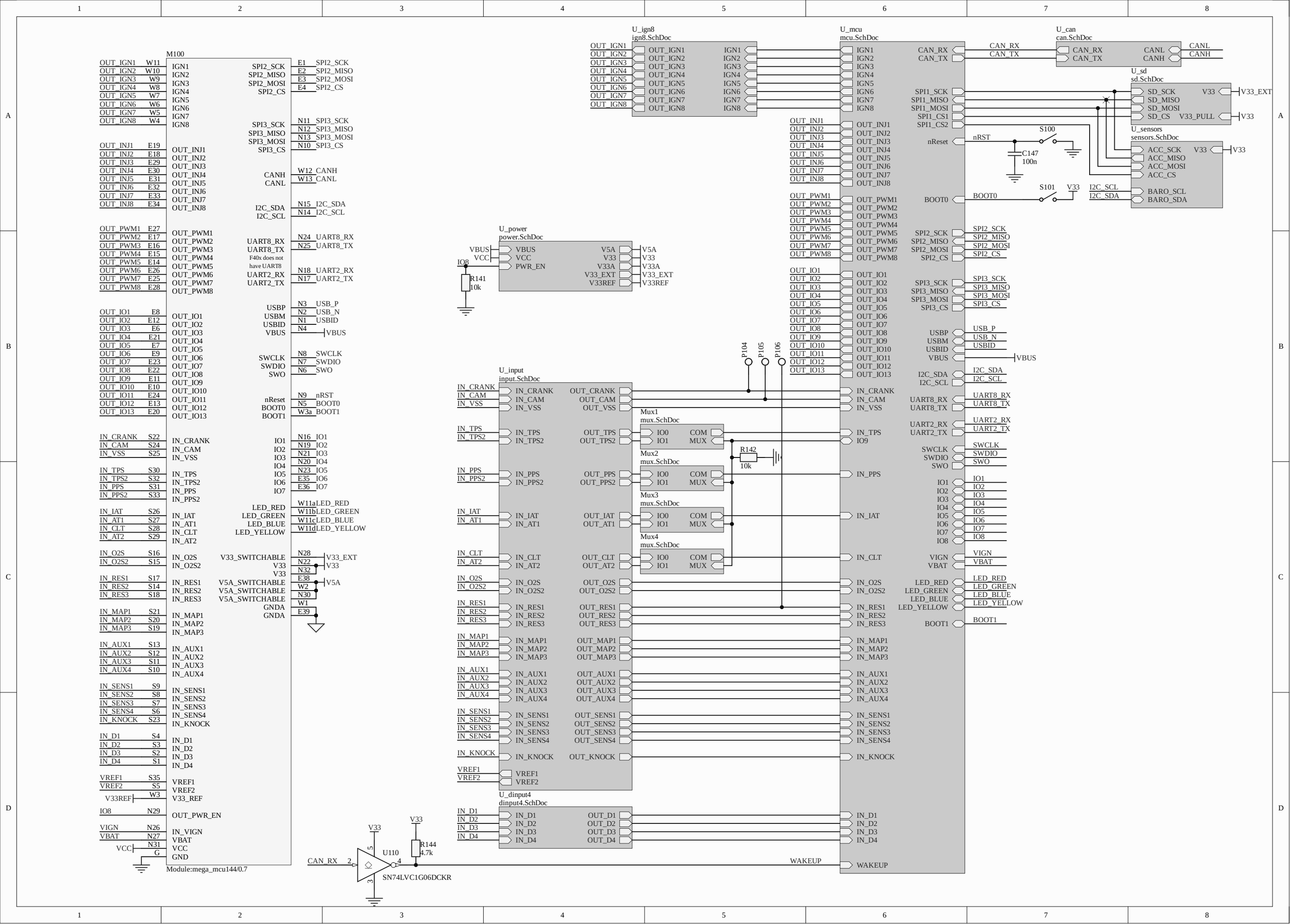
M100
Module:mega_mcu144/0.7
U_ign8
ign8.SchDoc
U_mcu
mcu.SchDoc
U_can
can.SchDoc
U_sd
sd.SchDoc
U_sensors
sensors.SchDoc
U_power
power.SchDoc
U_input
input.SchDoc
Mux1
mux.SchDoc
Mux2
mux.SchDoc
Mux3
mux.SchDoc
Mux4
mux.SchDoc
U_dinput4
dinput4.SchDoc
U110
SN74LVC1G06DCKR
R141
10k
R142
10k
R144
4.7k
C147
100n
S100
S101
P104
P105
P106
V33_EXT
V5A
V33
VBUS
WAKEUP

More accurate threshold for "raw" connection of VR sensors

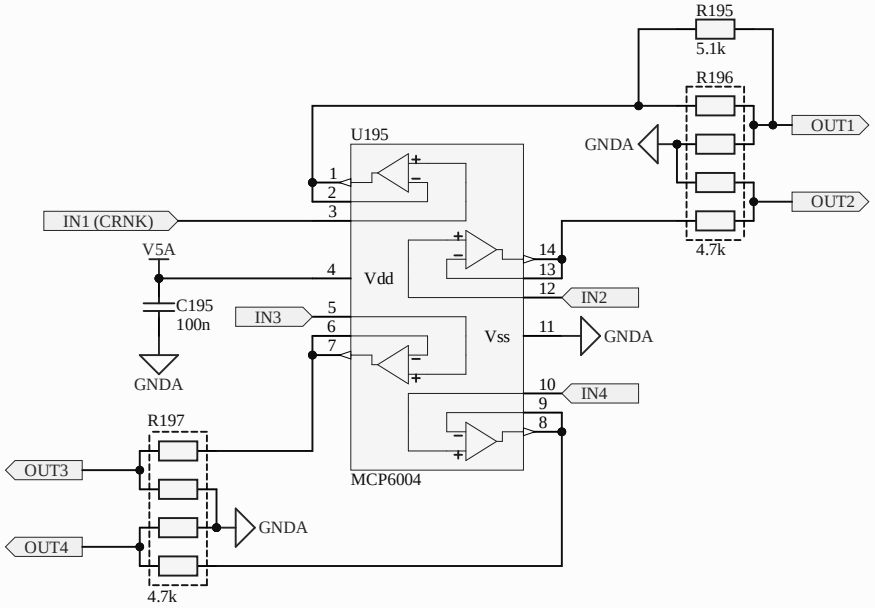

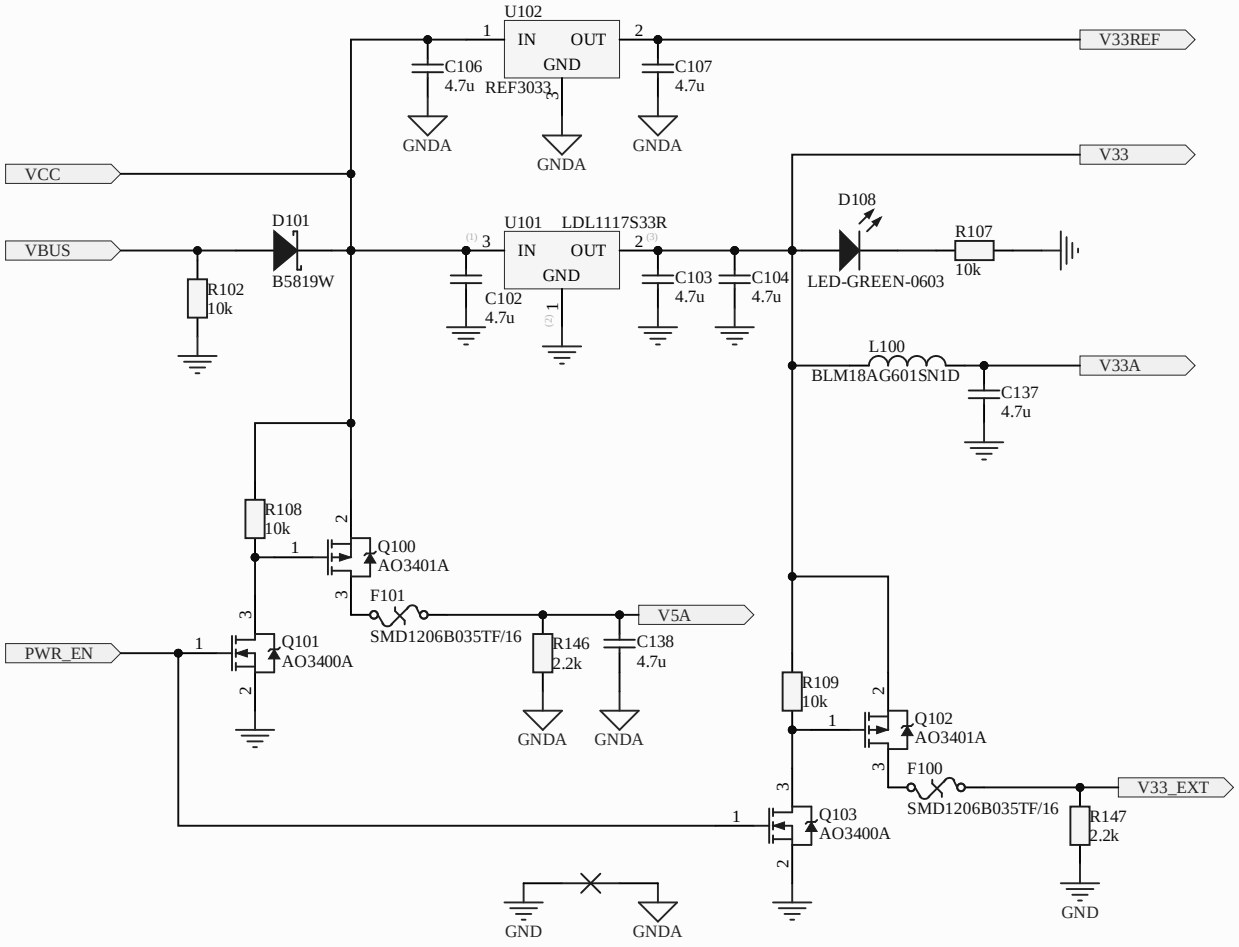

Title		
Size A4	Number	Revision
Date: 2.15.2025		Sheet of
File: C:\Work\..\power.SchDoc		Drawn By:

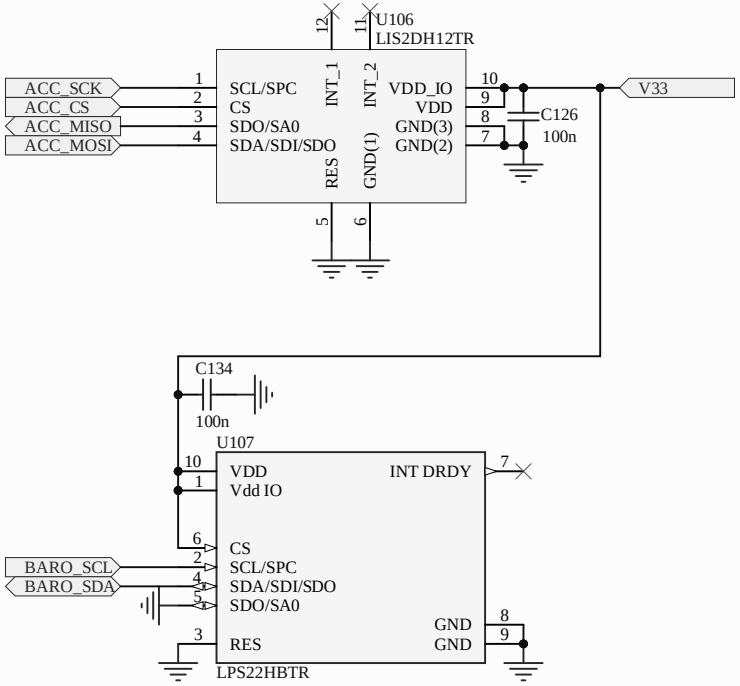
U106
LIS2DH12TR
ACC_SCK
ACC_CS
ACC_MISO
ACC_MOSI
SCL/SPC
CS
SDO/SA0
SDA/SDI/SDO
INT_1
INT_2
RES
GND(1)
VDD_IO
VDD
GND(3)
GND(2)
C126
100n
V33
C134
100n
U107
VDD
Vdd IO
INT DRDY
CS
SCL/SPC
SDA/SDI/SDO
SDO/SA0
RES
GND
GND
BARO_SCL
BARO_SDA
LPS22HBTR

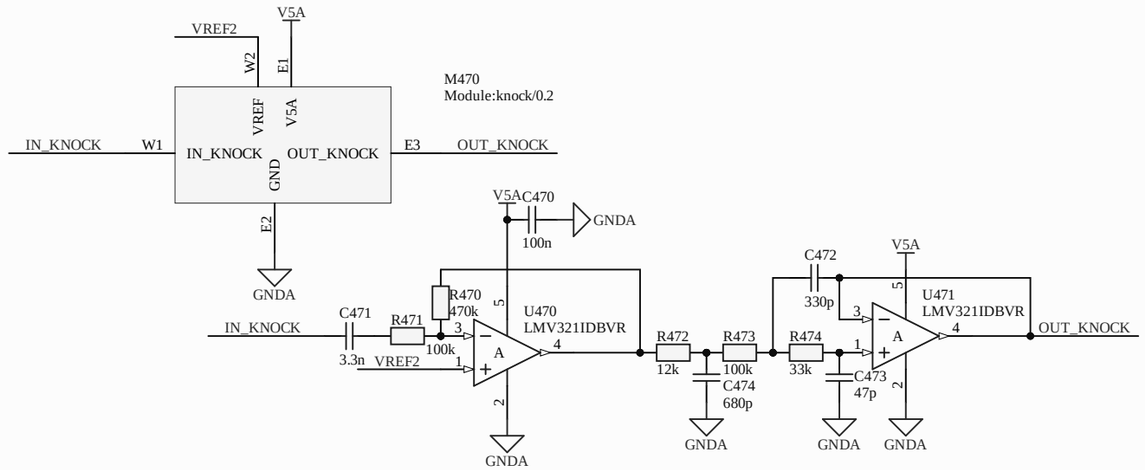

Title: ***Hellen-One Knock***			***rusEFI EMS*** ***Hellen-One Platform*** *https://rusefi.com/s/hellen72*
Size: A3	Author: andreika	Revision: 0.2	
Date: 15.02.2023		Sheet 1 of 1	

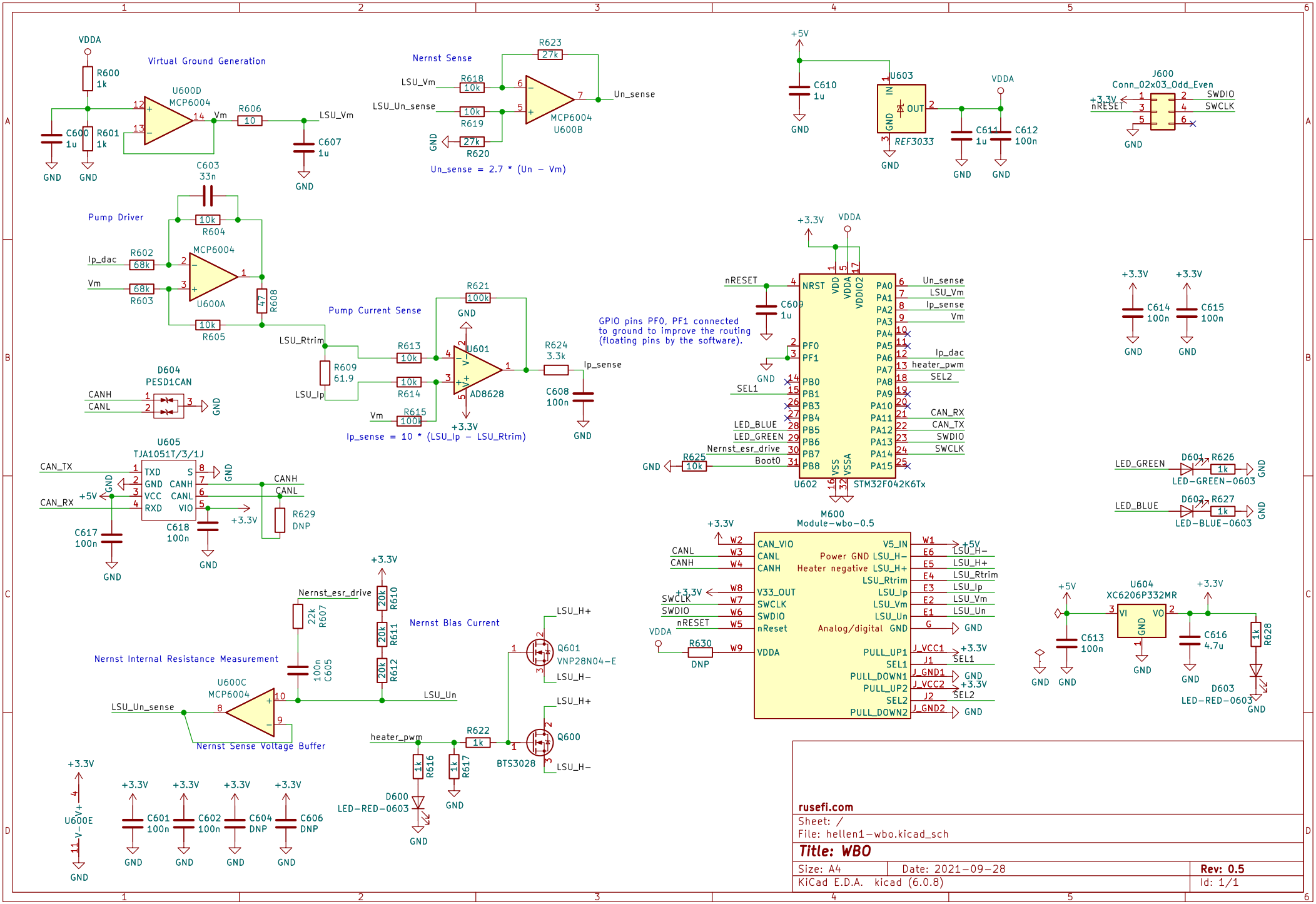
Virtual Ground Generation
U600D
MCP6004
VDDA
R600
1k
R601
1k
C600
1u
GND
Vm
R606
10
LSU_Vm
C607
1u
Nernst Sense
R623
27k
R618
10k
LSU_Vm
LSU_Un_sense
R619
10k
R620
27k
MCP6004
U600B
Un_sense
Un_sense = 2.7 * (Un − Vm)
+5V
C610
1u
U603
REF3033
VDDA
C611
1u
C612
100n
J600
Conn_02x03_Odd_Even
+3.3V
nRESET
SWDIO
SWCLK
C603
33n
Pump Driver
R604
10k
Ip_dac
R602
68k
Vm
R603
68k
MCP6004
U600A
R608
47
R605
10k
Pump Current Sense
LSU_Rtrim
R609
61.9
LSU_Ip
R613
10k
R614
10k
R615
100k
R621
100k
U601
AD8628
R624
3.3k
Ip_sense
C608
100n
Ip_sense = 10 * (LSU_Ip − LSU_Rtrim)
D604
PESD1CAN
CANH
CANL
U605
TJA1051T/3/1J
TXD
GND
VCC
RXD
S
CANH
CANL
VIO
CAN_TX
CAN_RX
C617
100n
C618
100n
R629
DNP
+3.3V
Nernst Internal Resistance Measurement
Nernst_esr_drive
22k
R607
100n
C605
R610
20k
R611
20k
R612
20k
Nernst Bias Current
LSU_Un
U600C
MCP6004
LSU_Un_sense
Nernst Sense Voltage Buffer
Q601
VNP28N04-E
LSU_H+
LSU_H−
Q600
BTS3028
heater_pwm
R622
1k
R616
1k
R617
1k
D600
LED-RED-0603
U600E
C601
100n
C602
100n
C604
DNP
C606
DNP
GPIO pins PF0, PF1 connected
to ground to improve the routing
(floating pins by the software).
U602
STM32F042K6Tx
NRST
VDD
VDDA
VDDIO2
PA0
PA1
PA2
PA3
PA4
PA5
PA6
PA7
PA8
PA9
PA10
PA11
PA12
PA13
PA14
PA15
PF0
PF1
PB0
PB1
PB3
PB4
PB5
PB6
PB7
PB8
VSS
VSSA
Un_sense
LSU_Vm
Ip_sense
Vm
Ip_dac
heater_pwm
SEL2
CAN_RX
CAN_TX
SWDIO
SWCLK
C609
1u
SEL1
LED_BLUE
LED_GREEN
Nernst_esr_drive
Boot0
R625
10k
C614
100n
C615
100n
D601
R626
1k
LED-GREEN-0603
D602
R627
1k
LED-BLUE-0603
M600
Module-wbo-0.5
CAN_VIO
CANL
CANH
V33_OUT
SWCLK
SWDIO
nReset
VDDA
V5_IN
Power GND
Heater negative
LSU_H−
LSU_H+
LSU_Rtrim
LSU_Ip
LSU_Vm
LSU_Un
Analog/digital GND
PULL_UP1
SEL1
PULL_DOWN1
PULL_UP2
SEL2
PULL_DOWN2
J_VCC1
J1
J_GND1
J_VCC2
J2
J_GND2
R630
DNP
U604
XC6206P332MR
VI
VO
C613
100n
C616
4.7u
R628
1k
D603
LED-RED-0603
rusefi.com
Sheet: /
File: hellen1-wbo.kicad_sch
Title: WBO
Size: A4
Date: 2021-09-28
Rev: 0.5
KiCad E.D.A. kicad (6.0.8)
Id: 1/1

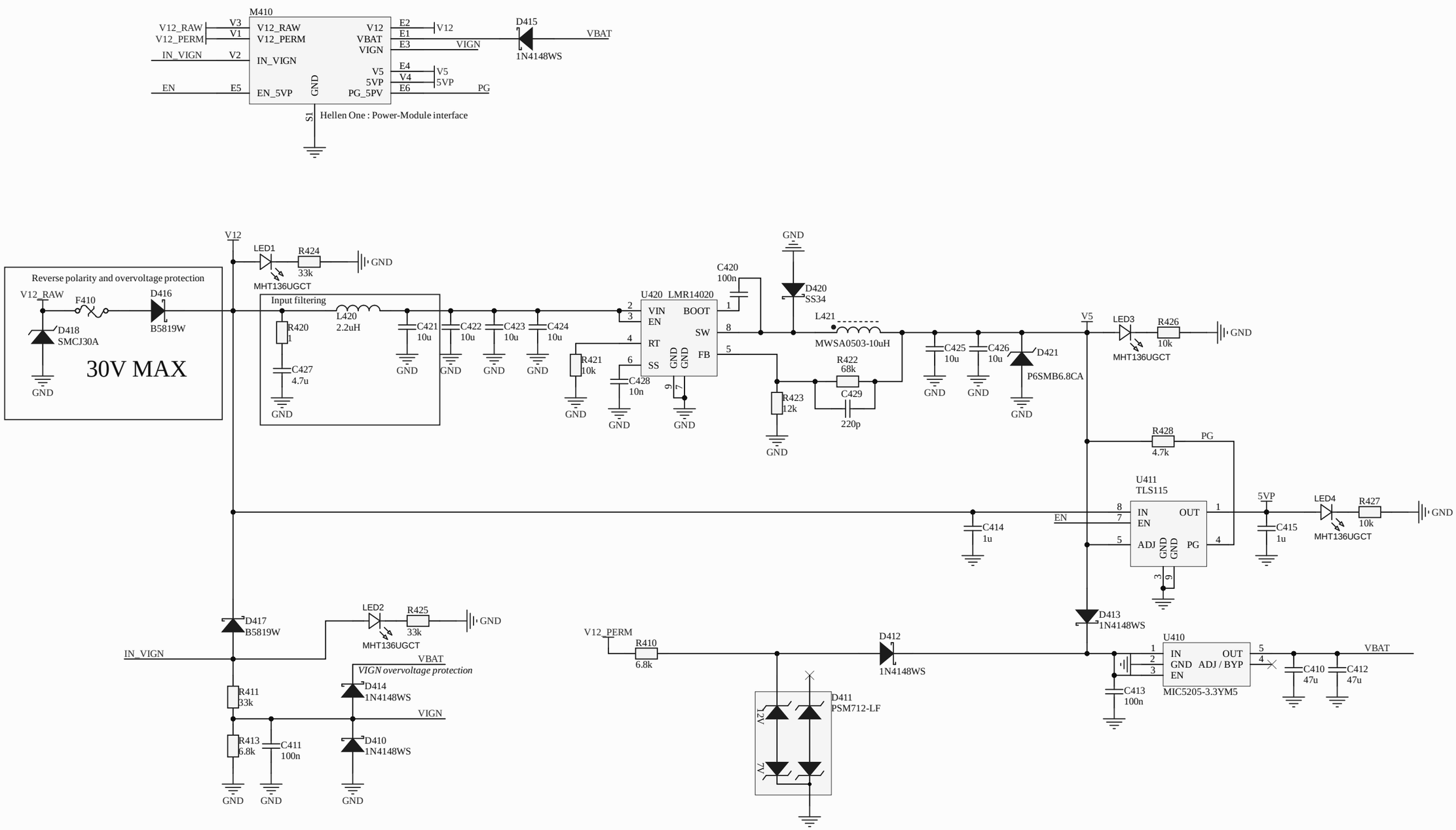

power_12and5V-0.3

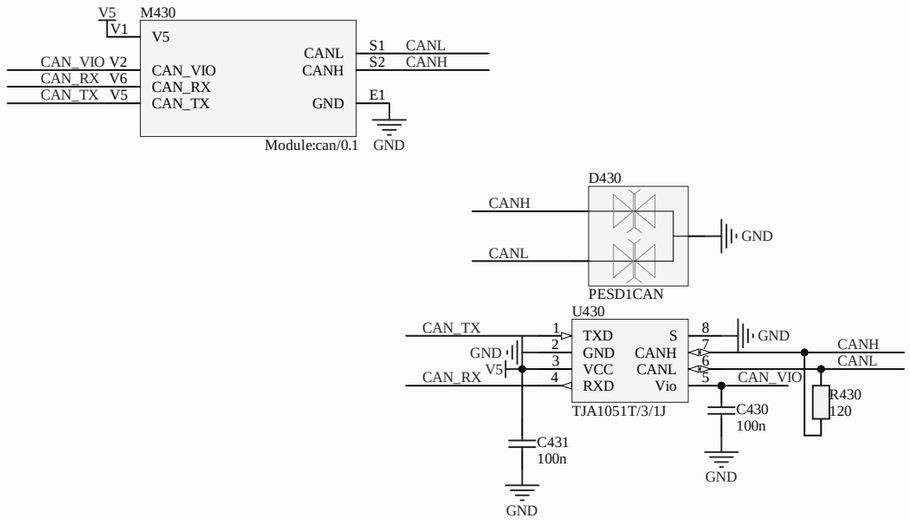

Title: ***Hellen-One CAN***			***rusEFI EMS*** ***Hellen-One Platform*** *https://rusefi.com/s/hellen72*
Size: A3	Author: andreika	Revision: 0.1	
Date: 02.03.2021		Sheet 1 of 1	