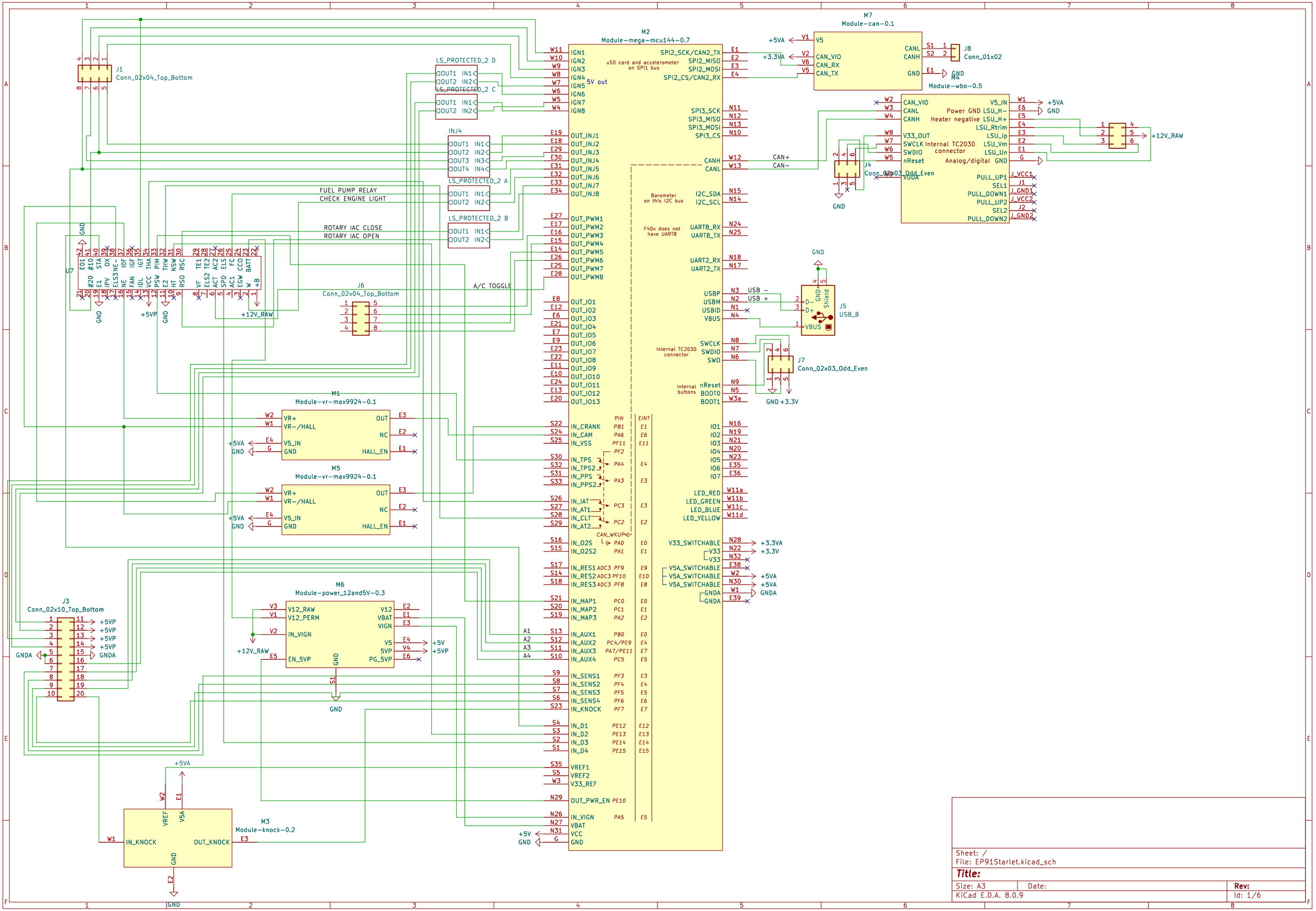

Sheet: /
File: EP91Starlet.kicad_sch

Title:

Size: A3	Date:	Rev:
KiCad E.D.A. 8.0.9		Id: 1/6

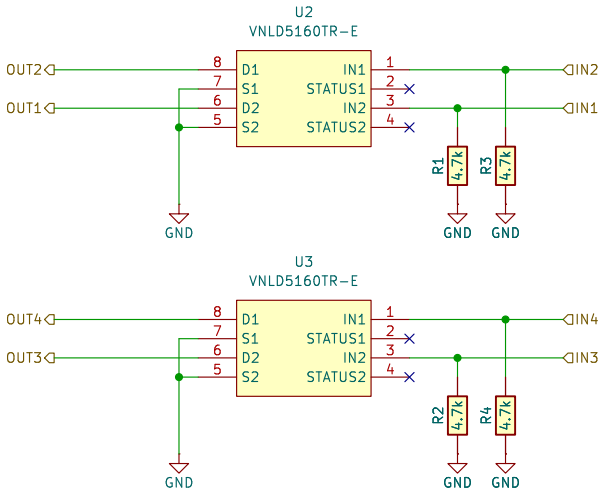

Sheet: /INJ4/
File: INJ4.kicad_sch

Title:

Size: A4	Date:	**Rev:**
KiCad E.D.A. 8.0.9		Id: 2/6

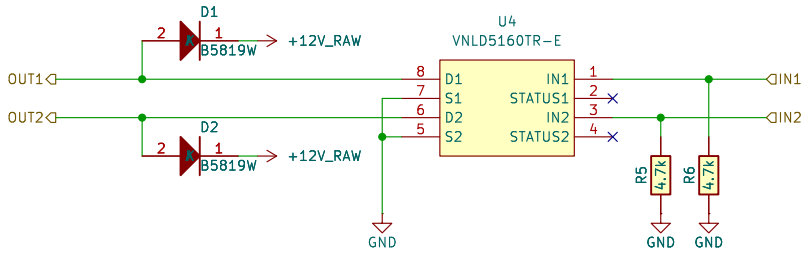

Sheet: /LS_PROTECTED_2 C/
File: LSPROT2.kicad_sch

Title:

Size: A4	Date:	Rev:
KiCad E.D.A. 8.0.9		Id: 3/6

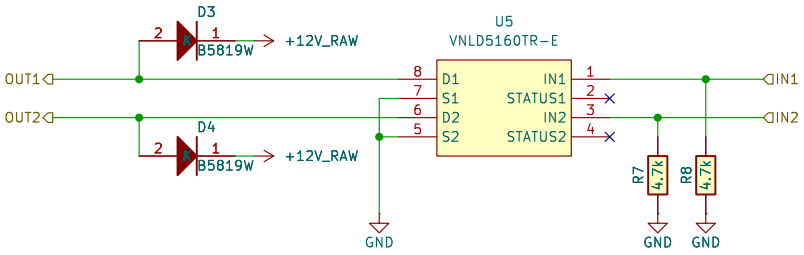

Sheet: /LS_PROTECTED_2 D/
File: LSPROT2.kicad_sch

Title:

Size: A4	Date:	Rev:
KiCad E.D.A. 8.0.9		Id: 4/6

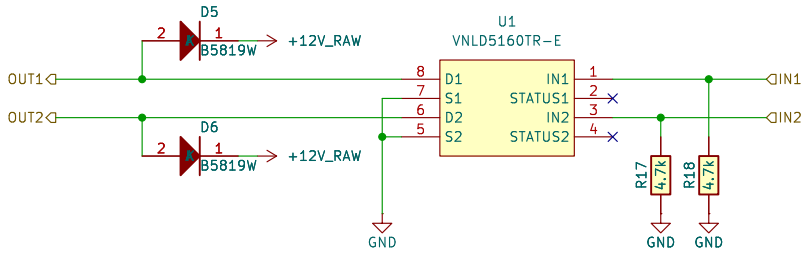

Sheet: /LS_PROTECTED_2 A/
File: LSPROT2.kicad_sch

Title:

Size: A4	Date:	Rev:
KiCad E.D.A. 8.0.9		Id: 6/6

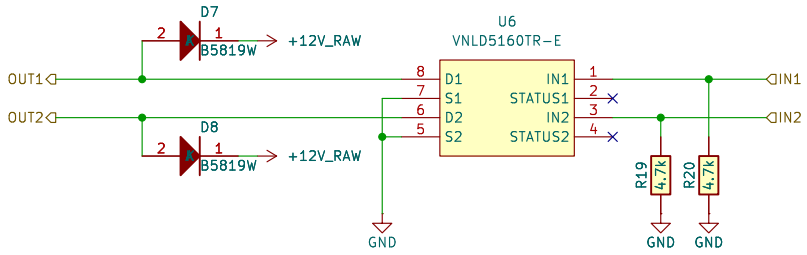

Sheet: /LS_PROTECTED_2 B/
File: LSPROT2.kicad_sch

Title:

Size: A4	Date:	Rev:
KiCad E.D.A. 8.0.9		Id: 7/6