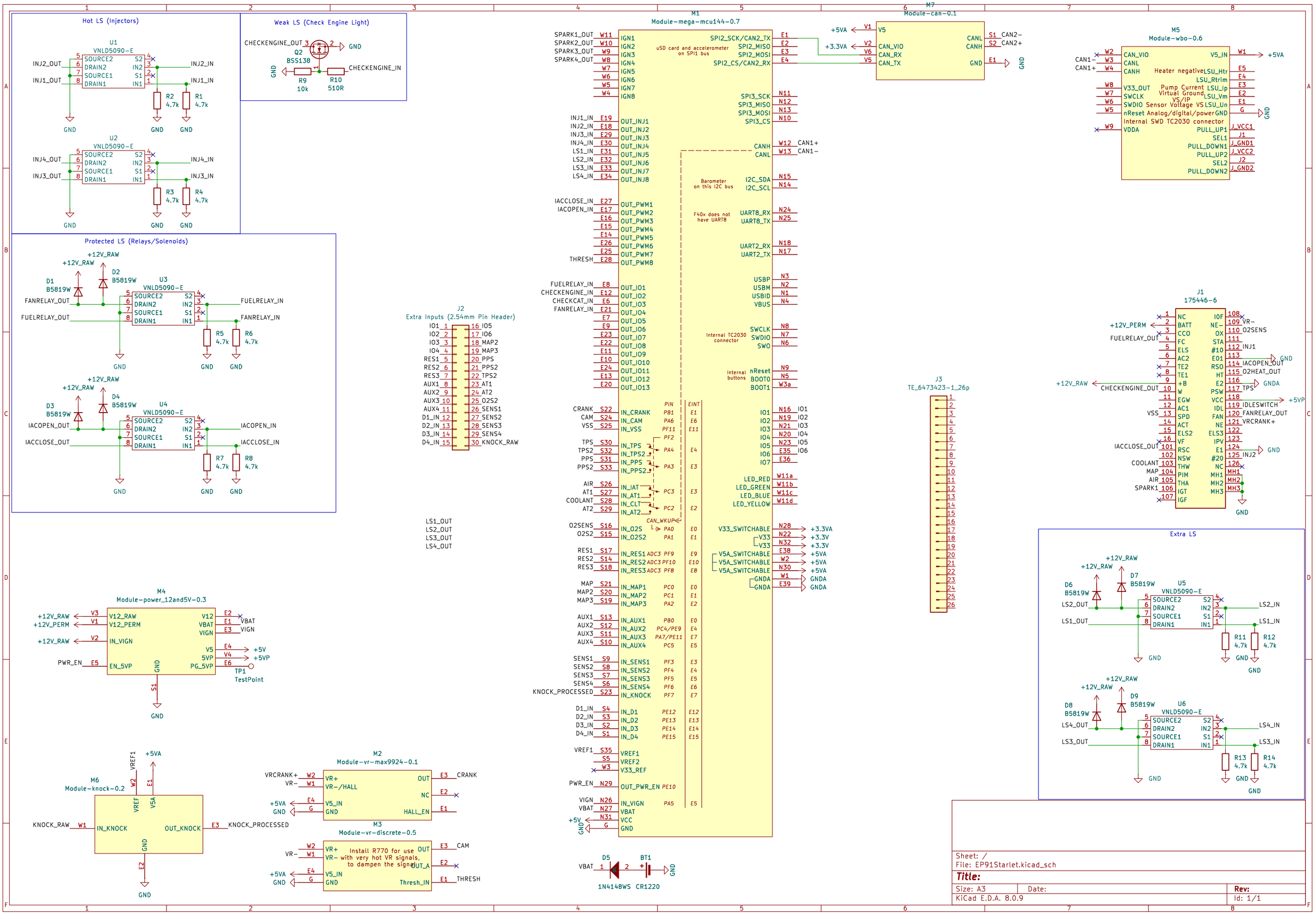
Hot LS (Injectors)
U1
VNLD5090-E
INJ2_OUT
INJ1_OUT
INJ2_IN
INJ1_IN
R2 4.7k
R1 4.7k
U2
VNLD5090-E
INJ4_OUT
INJ3_OUT
INJ4_IN
INJ3_IN
R3 4.7k
R4 4.7k
Weak LS (Check Engine Light)
CHECKENGINE_OUT
Q2
BSS138
R9 10k
R10 510R
CHECKENGINE_IN
Protected LS (Relays/Solenoids)
+12V_RAW
D1 B5819W
D2 B5819W
U3
VNLD5090-E
FANRELAY_OUT
FUELRELAY_OUT
FUELRELAY_IN
FANRELAY_IN
R5 4.7k
R6 4.7k
D3 B5819W
D4 B5819W
U4
VNLD5090-E
IACOPEN_OUT
IACCLOSE_OUT
IACOPEN_IN
IACCLOSE_IN
R7 4.7k
R8 4.7k
M1
Module-mega-mcu144-0.7
uSD card and accelerometer on SPI1 bus
Barometer on this I2C bus
F40x does not have UART8
Internal TC2030 connector
Internal buttons
M7
Module-can-0.1
M5
Module-wbo-0.6
Heater negative
Pump Current
Virtual Ground
VS/IP
Sensor Voltage
Analog/digital/power
Internal SWD TC2030 connector
J2
Extra Inputs (2.54mm Pin Header)
J3
TE_6473423-1_26p
J1
175446-6
Extra LS
D6 B5819W
D7 B5819W
U5
VNLD5090-E
LS2_OUT
LS1_OUT
LS2_IN
LS1_IN
R11 4.7k
R12 4.7k
D8 B5819W
D9 B5819W
U6
VNLD5090-E
LS4_OUT
LS3_OUT
LS4_IN
LS3_IN
R13 4.7k
R14 4.7k
M4
Module-power_12and5V-0.3
PWR_EN
TP1
TestPoint
M6
Module-knock-0.2
KNOCK_RAW
KNOCK_PROCESSED
M2
Module-vr-max9924-0.1
VRCRANK+
VR-
CRANK
M3
Module-vr-discrete-0.5
Install R770 for use with very hot VR signals, to dampen the signal
CAM
THRESH
D5
1N4148WS
BT1
CR1220
VBAT
Sheet: /
File: EP91Starlet.kicad_sch
Title:
Size: A3
Date:
Rev:
KiCad E.D.A. 8.0.9
Id: 1/1