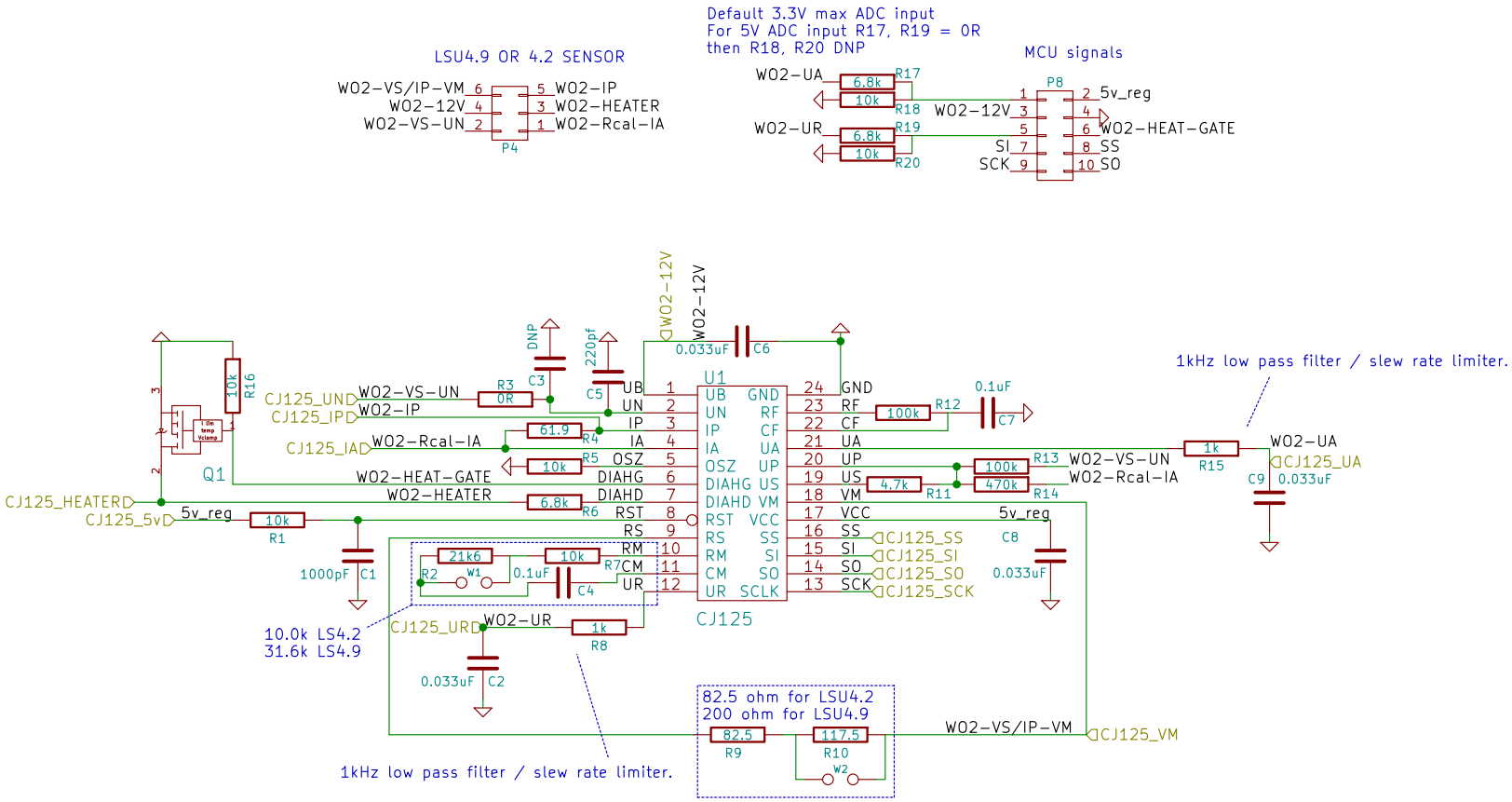

rusEFI.com		
Sheet: /		
File: O2_input_CJ125.sch		
Title: CJ125 Wide O2		
Size: A	Date: 2017-01-30	Rev: R0.3
KiCad E.D.A. kicad 4.0.5		Id: 1/1