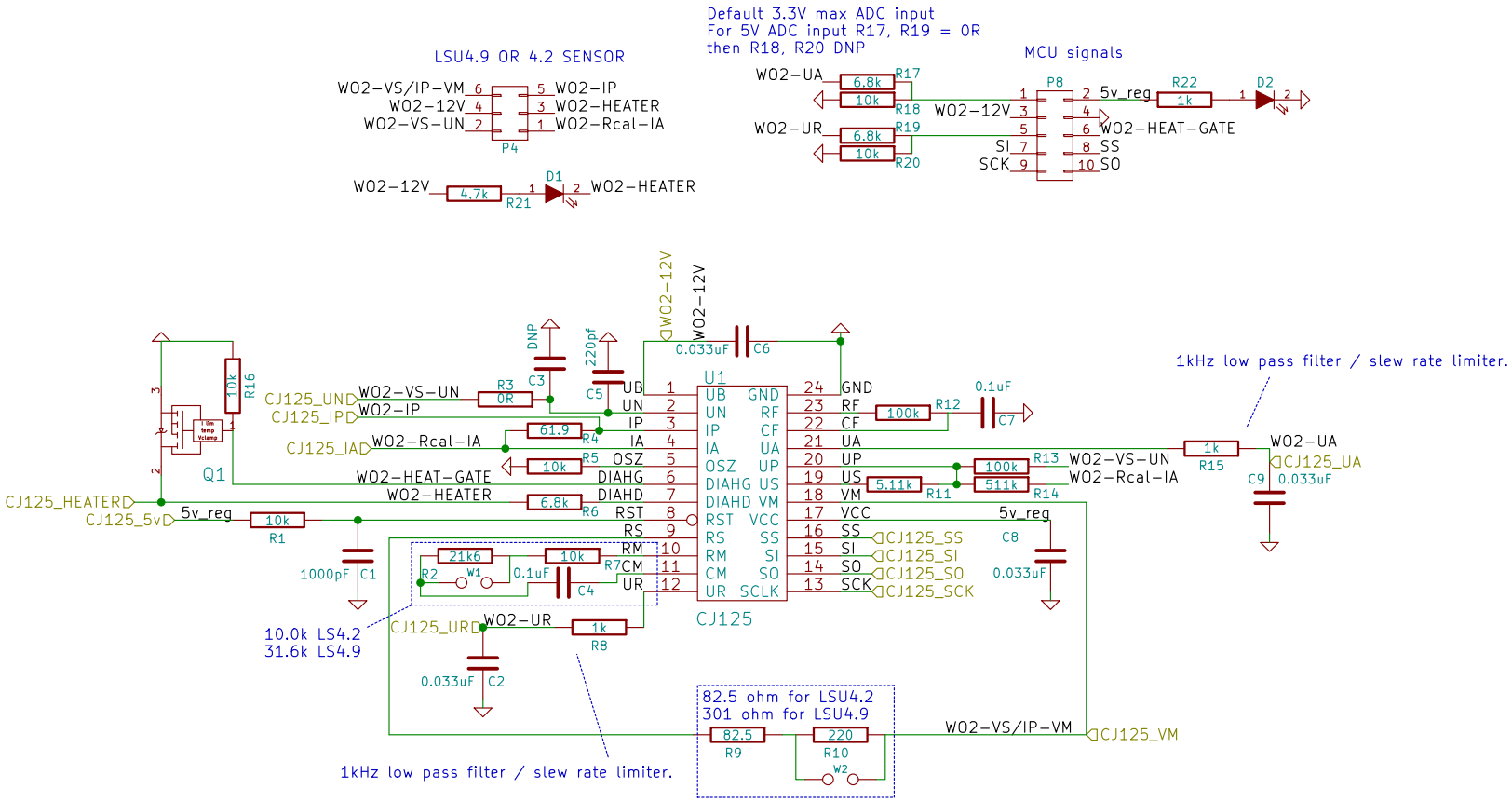

LSU4.2: R2=DNP, W1=0R
LSU4.9: R2=21.6R, W1=DNP

LSU4.2: R9=82.5, R10=DNP, W2=0R
LSU4.9: R9=301, R10=220, W2=DNP

rusEFI.com		
Sheet: /		
File: O2_input_CJ125.sch		
Title: CJ125 Wide O2		
Size: A	Date: 2019-01-08	Rev: R0.4.2
KiCad E.D.A. kicad 4.0.7		Id: 1/1