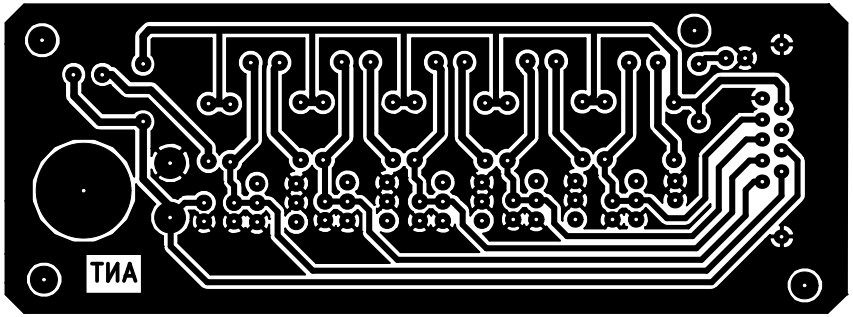

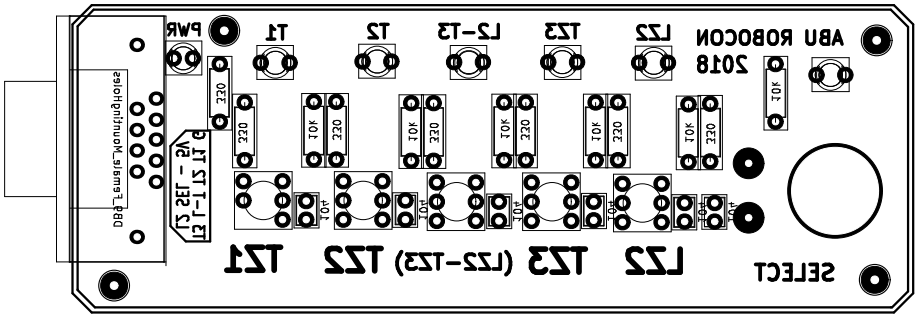
ABU ROBOCON
2018
LZ2
TZ3
LZ-TZ3
T2
T1
PWR
SELECT
LZ2 TZ3 (LZ2-TZ3) TZ2 TZ1
220
10K
10K
10K
10K
10K
10K
220
220
220
220
220
220
10K
10K
10K
10K
10K
10K