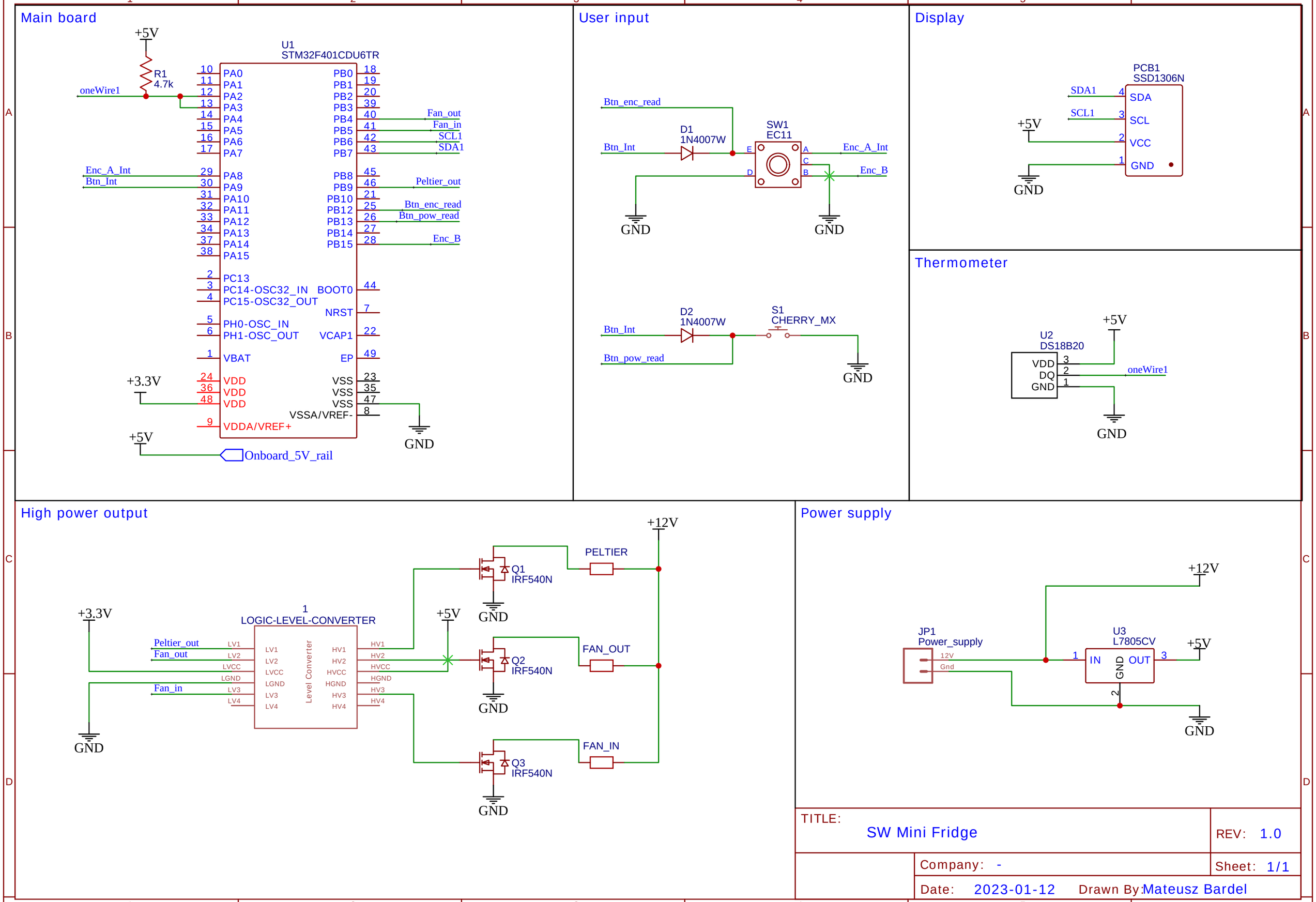
Main board
+5V
R1
4.7k
oneWire1
U1
STM32F401CDU6TR
PA0
PA1
PA2
PA3
PA4
PA5
PA6
PA7
PA8
PA9
PA10
PA11
PA12
PA13
PA14
PA15
PC13
PC14-OSC32_IN
PC15-OSC32_OUT
PH0-OSC_IN
PH1-OSC_OUT
VBAT
VDD
VDD
VDD
VDDA/VREF+
PB0
PB1
PB2
PB3
PB4
PB5
PB6
PB7
PB8
PB9
PB10
PB12
PB13
PB14
PB15
BOOT0
NRST
VCAP1
EP
VSS
VSS
VSS
VSSA/VREF-
Fan_out
Fan_in
SCL1
SDA1
Enc_A_Int
Btn_Int
Peltier_out
Btn_enc_read
Btn_pow_read
Enc_B
+3.3V
+5V
Onboard_5V_rail
GND
User input
Btn_enc_read
Btn_Int
D1
1N4007W
SW1
EC11
Enc_A_Int
Enc_B
GND
GND
Btn_Int
Btn_pow_read
D2
1N4007W
S1
CHERRY_MX
GND
Display
PCB1
SSD1306N
SDA1
SCL1
+5V
SDA
SCL
VCC
GND
GND
Thermometer
+5V
U2
DS18B20
VDD
DQ
GND
oneWire1
GND
High power output
+12V
PELTIER
Q1
IRF540N
GND
+3.3V
1
LOGIC-LEVEL-CONVERTER
+5V
Peltier_out
Fan_out
Fan_in
LV1
LV2
LVCC
LGND
LV3
LV4
Level Converter
HV1
HV2
HVCC
HGND
HV3
HV4
FAN_OUT
Q2
IRF540N
GND
GND
FAN_IN
Q3
IRF540N
GND
Power supply
+12V
JP1
Power_supply
12V
Gnd
U3
L7805CV
IN
OUT
GND
+5V
GND
TITLE:
SW Mini Fridge
REV: 1.0
Company: -
Sheet: 1/1
Date: 2023-01-12
Drawn By: Mateusz Bardel