USB

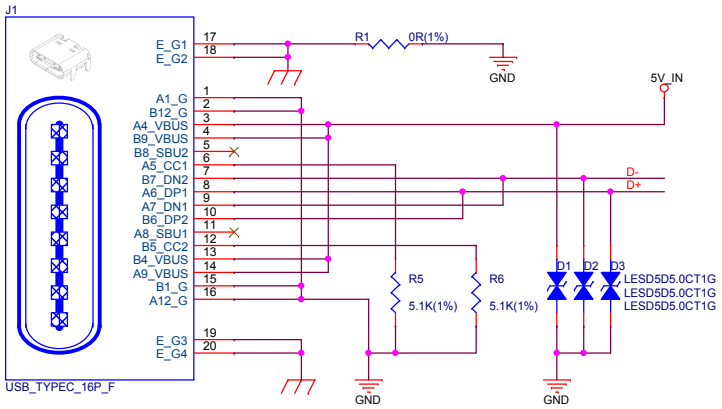

Goldfinger CONN

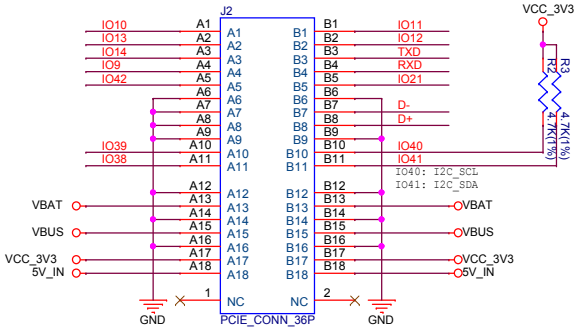

VBAT and VBUS is used for SENSOR board (battery power supply)

Temp&Humidity

Idd_sleep=250nA
Idd_work=320uA

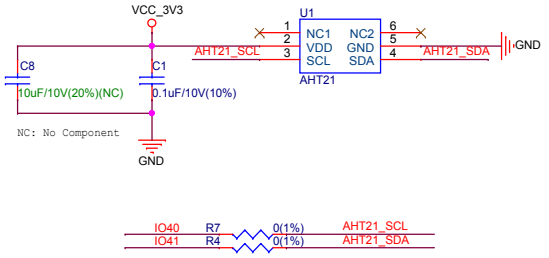

Battery charge & protection

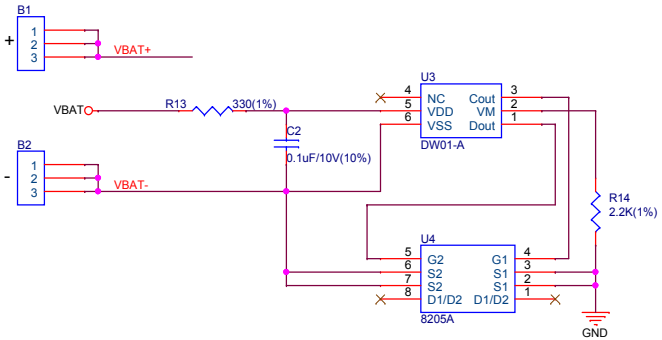

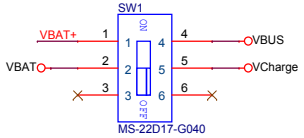

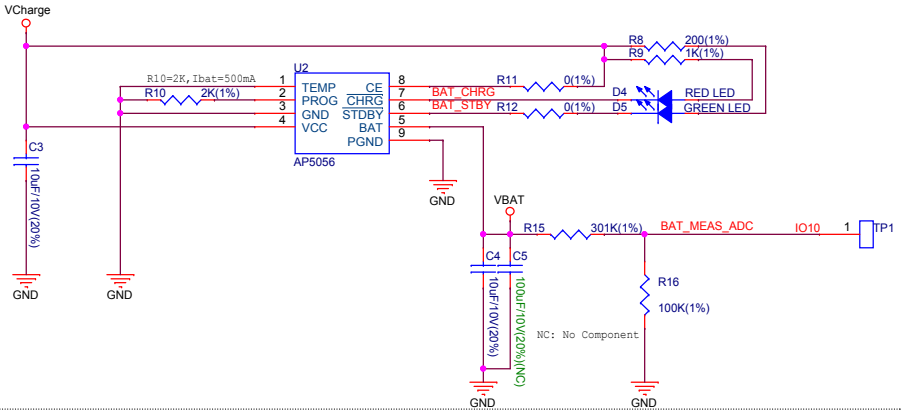

TF Card

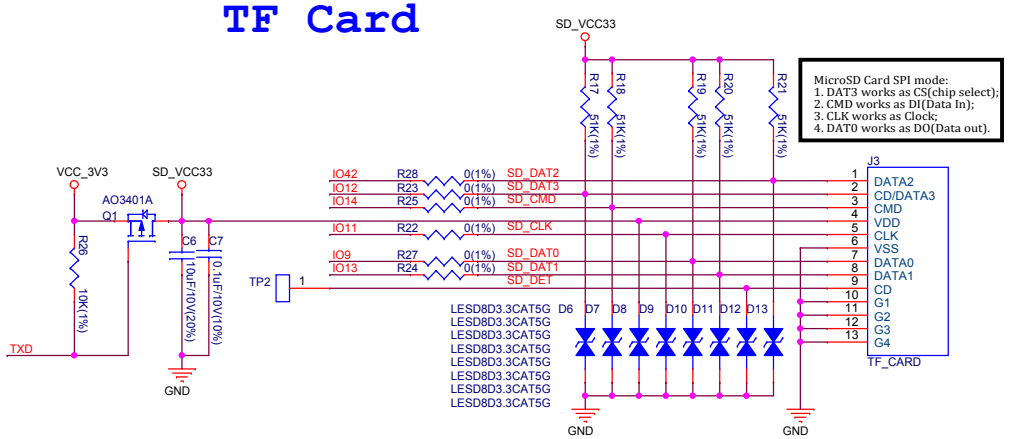

MicroSD Card SPI mode:
1. DAT3 works as CS(chip select);
2. CMD works as DI(Data In);
3. CLK works as Clock;
4. DAT0 works as DO(Data out).

CONN to ESP32-S3-BOX-3-SENSOR-02

ESPRESSIF			
乐鑫信息科技（上海）股份有限公司			
Title: ESP32-S3-BOX-3-SENSOR-01			
Size: A3	Page Name: 01_ESP32-S3-BOX-3-SENSOR-01	Rev: V1.0	Proprietary
Date: Thursday, August 03, 2023		Sheet 1 of 1	