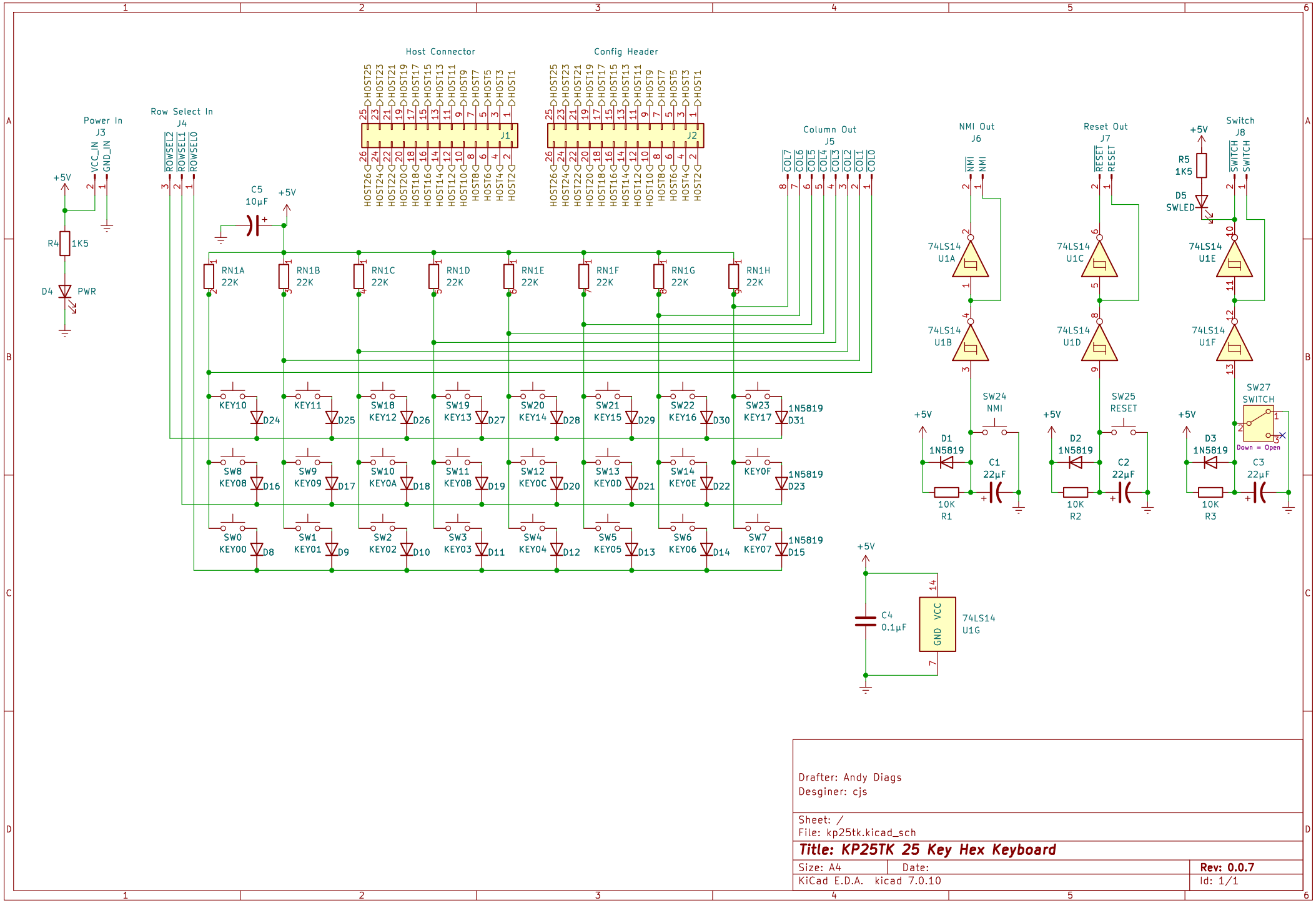

Drafter: Andy Diags
Desginer: cjs

Sheet: /
File: kp25tk.kicad_sch

Title: KP25TK 25 Key Hex Keyboard

Size: A4	Date:	Rev: 0.0.7
KiCad E.D.A. kicad 7.0.10		Id: 1/1