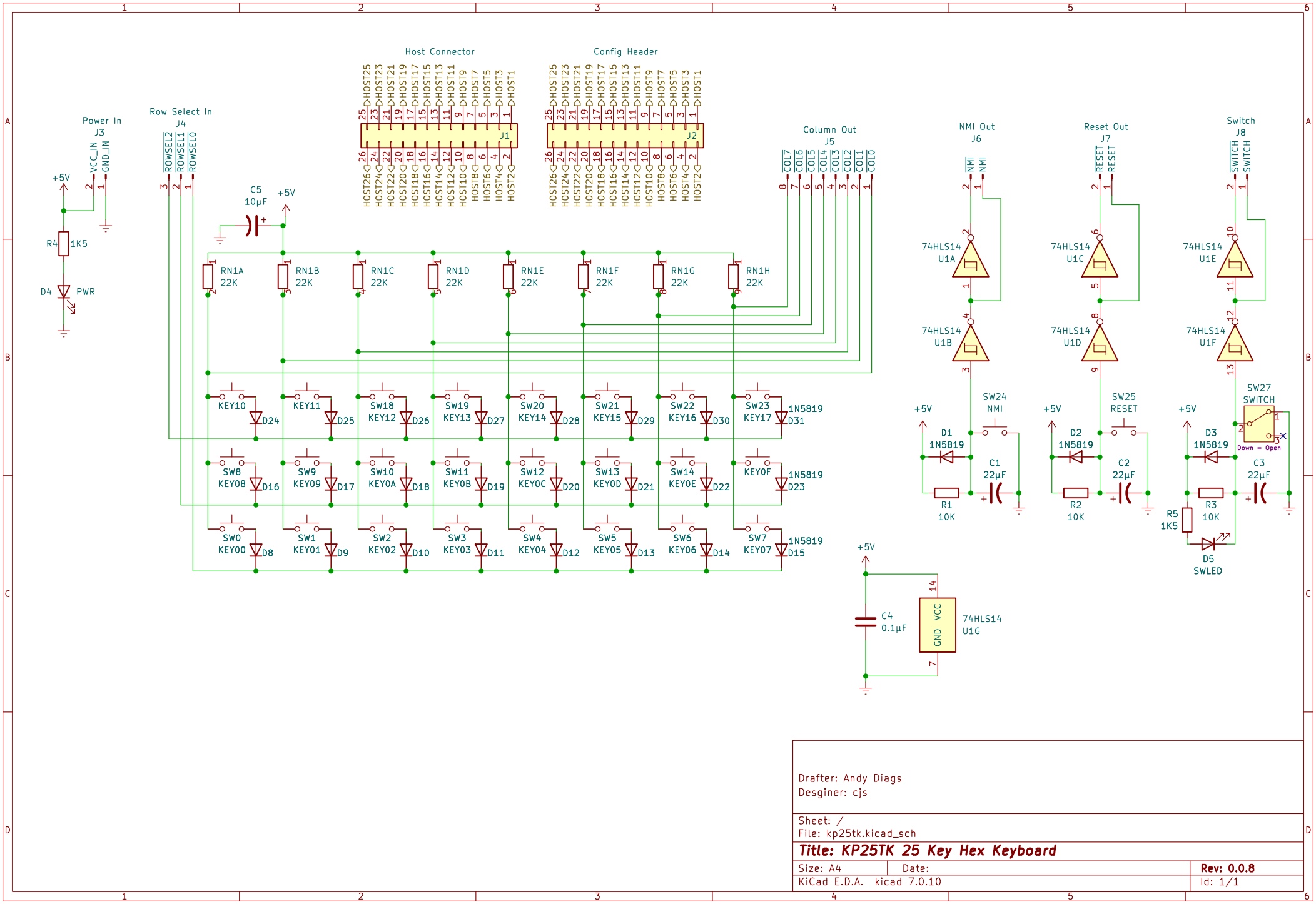
Host Connector
Config Header
Power In
J3
Row Select In
J4
Column Out
J5
NMI Out
J6
Reset Out
J7
Switch
J8
J1
J2
C5
10µF
+5V
R4
1K5
D4
PWR
RN1A 22K
RN1B 22K
RN1C 22K
RN1D 22K
RN1E 22K
RN1F 22K
RN1G 22K
RN1H 22K
74HLS14
U1A
U1B
U1C
U1D
U1E
U1F
U1G
SW24
NMI
SW25
RESET
SW27
SWITCH
Down = Open
D1
1N5819
D2
1N5819
D3
1N5819
C1
22µF
C2
22µF
C3
22µF
R1
10K
R2
10K
R3
10K
R5
1K5
D5
SWLED
C4
0.1µF
GND VCC
Drafter: Andy Diags
Desginer: cjs
Sheet: /
File: kp25tk.kicad_sch
Title: KP25TK 25 Key Hex Keyboard
Size: A4
Date:
Rev: 0.0.8
KiCad E.D.A. kicad 7.0.10
Id: 1/1