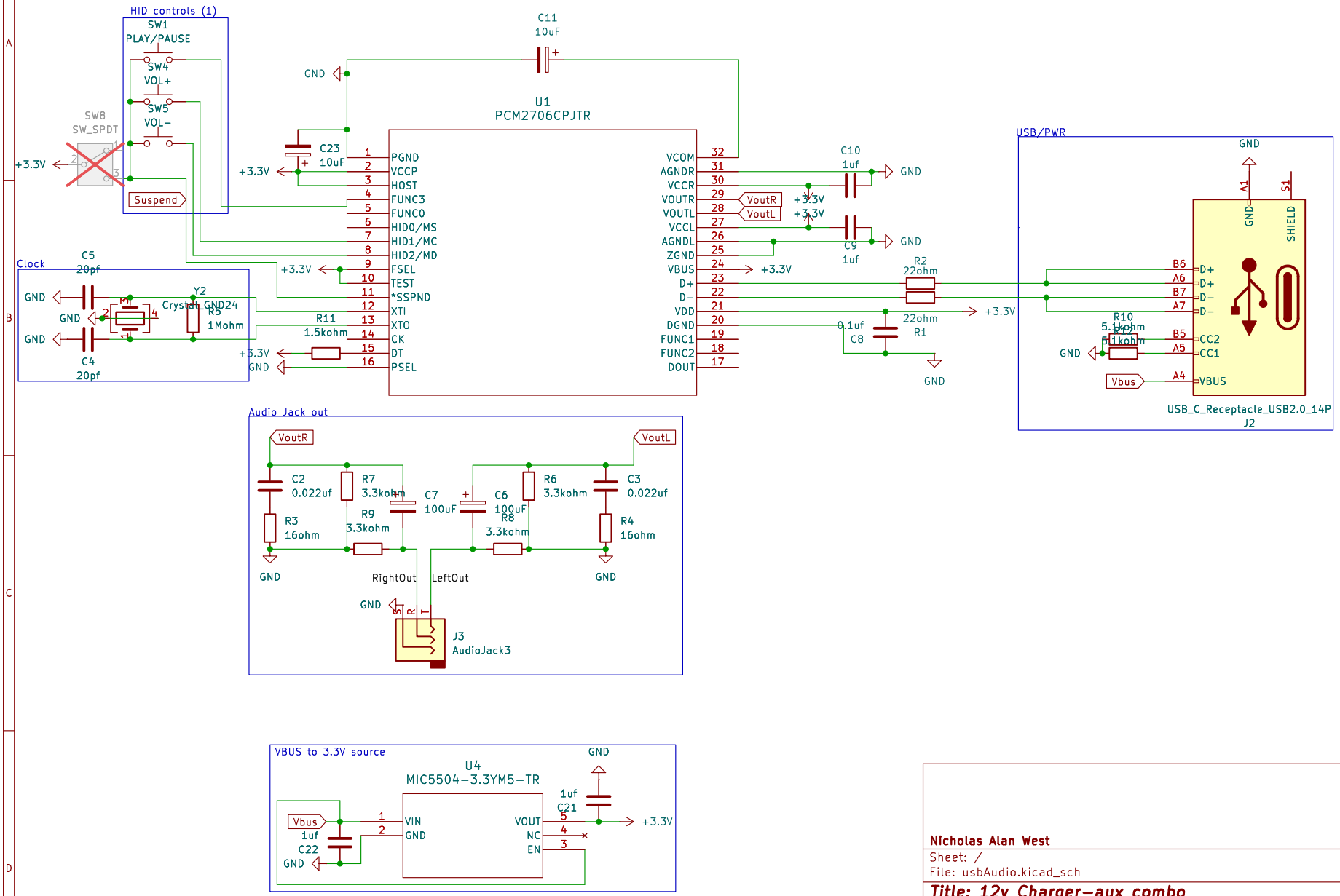

Nicholas Alan West

Sheet: /

File: usbAudio.kicad_sch

Title: 12v Charger−aux combo

Size: A4	Date: 2024−08−17	Rev: 0
KiCad E.D.A. 8.0.4		Id: 1/1