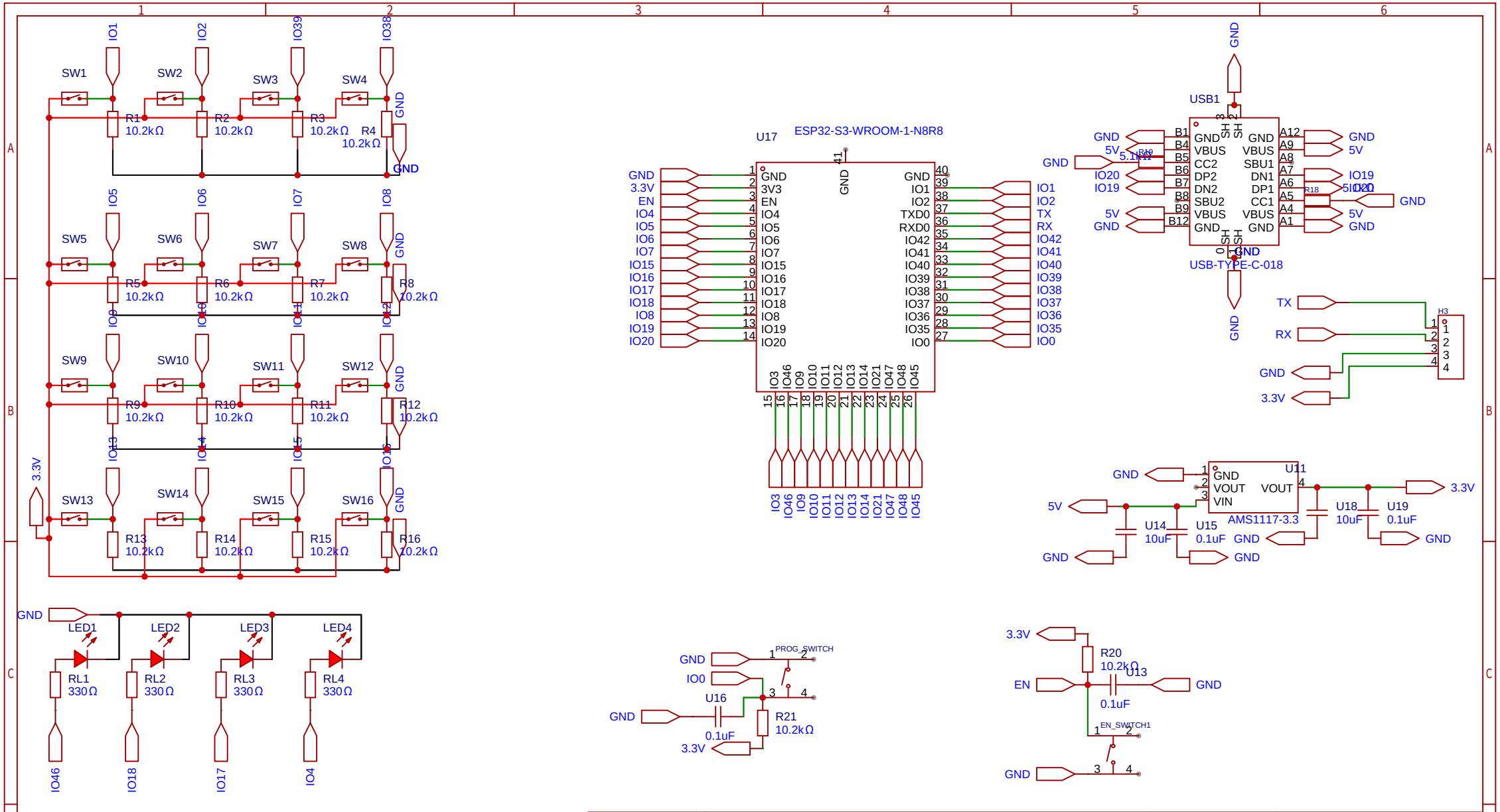

Schematic	Schematic1	Update Date	2024-09-08
		Create Date	2024-01-24
Page	P1	Part Number	
Drawn	Tiebe Groosman	Macro Pad	
Reviewed			
		VER	SIZE
		V0.2	A4

PAGE 1 OF 1

EasyEDA