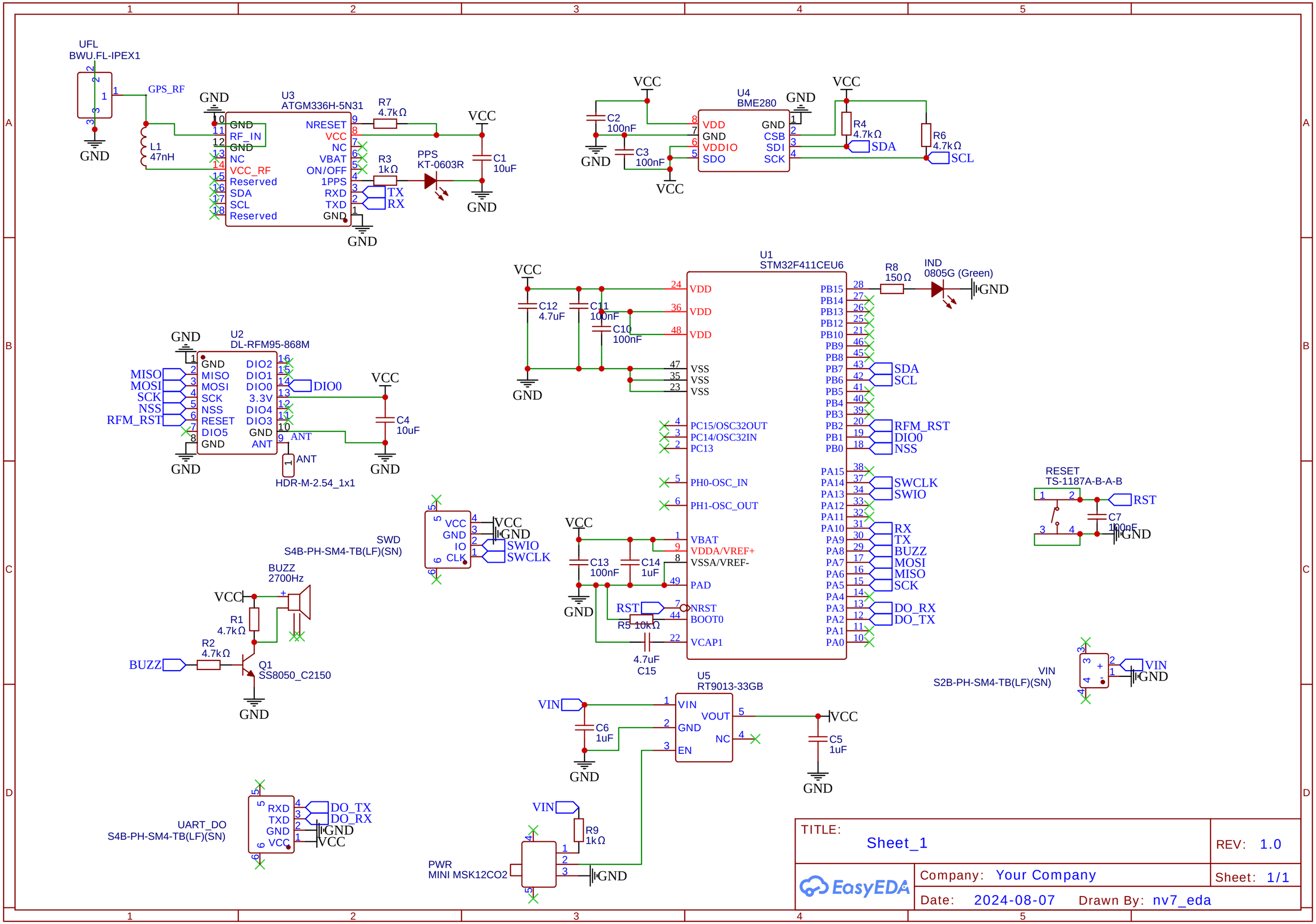
UFL
BWU.FL-IPEX1
GPS_RF
GND
L1
47nH
U3
ATGM336H-5N31
GND
RF_IN
GND
NC
VCC_RF
Reserved
SDA
SCL
Reserved
NRESET
VCC
NC
VBAT
ON/OFF
1PPS
RXD
TXD
GND
R7
4.7kΩ
R3
1kΩ
PPS
KT-0603R
TX
RX
C1
10uF
VCC
U4
BME280
VDD
GND
VDDIO
SDO
GND
CSB
SDI
SCK
C2
100nF
C3
100nF
R4
4.7kΩ
R6
4.7kΩ
SDA
SCL
U2
DL-RFM95-868M
MISO
MOSI
SCK
NSS
RESET
DIO5
DIO2
DIO1
DIO0
3.3V
DIO4
DIO3
ANT
DIO0
C4
10uF
HDR-M-2.54_1x1
U1
STM32F411CEU6
VDD
VSS
PC15/OSC32OUT
PC14/OSC32IN
PC13
PH0-OSC_IN
PH1-OSC_OUT
VBAT
VDDA/VREF+
VSSA/VREF-
PAD
NRST
BOOT0
VCAP1
C12
4.7uF
C11
100nF
C10
100nF
C13
100nF
C14
1uF
RST
R5 10kΩ
4.7uF
C15
R8
150Ω
IND
0805G (Green)
PB15
PB14
PB13
PB12
PB10
PB9
PB8
PB7
PB6
PB5
PB4
PB3
PB2
PB1
PB0
PA15
PA14
PA13
PA12
PA11
PA10
PA9
PA8
PA7
PA6
PA5
PA4
PA3
PA2
PA1
PA0
SDA
SCL
RFM_RST
DIO0
NSS
SWCLK
SWIO
RX
TX
BUZZ
MOSI
MISO
SCK
DO_RX
DO_TX
RESET
TS-1187A-B-A-B
RST
C7
100nF
SWD
S4B-PH-SM4-TB(LF)(SN)
VCC
GND
IO
CLK
SWIO
SWCLK
BUZZ
2700Hz
R1
4.7kΩ
R2
4.7kΩ
Q1
SS8050_C2150
VIN
S2B-PH-SM4-TB(LF)(SN)
U5
RT9013-33GB
VIN
GND
EN
VOUT
NC
C6
1uF
C5
1uF
UART_DO
S4B-PH-SM4-TB(LF)(SN)
RXD
TXD
GND
VCC
DO_TX
DO_RX
PWR
MINI MSK12CO2
R9
1kΩ
TITLE:
Sheet_1
REV: 1.0
Company: Your Company
Sheet: 1/1
Date: 2024-08-07
Drawn By: nv7_eda
EasyEDA