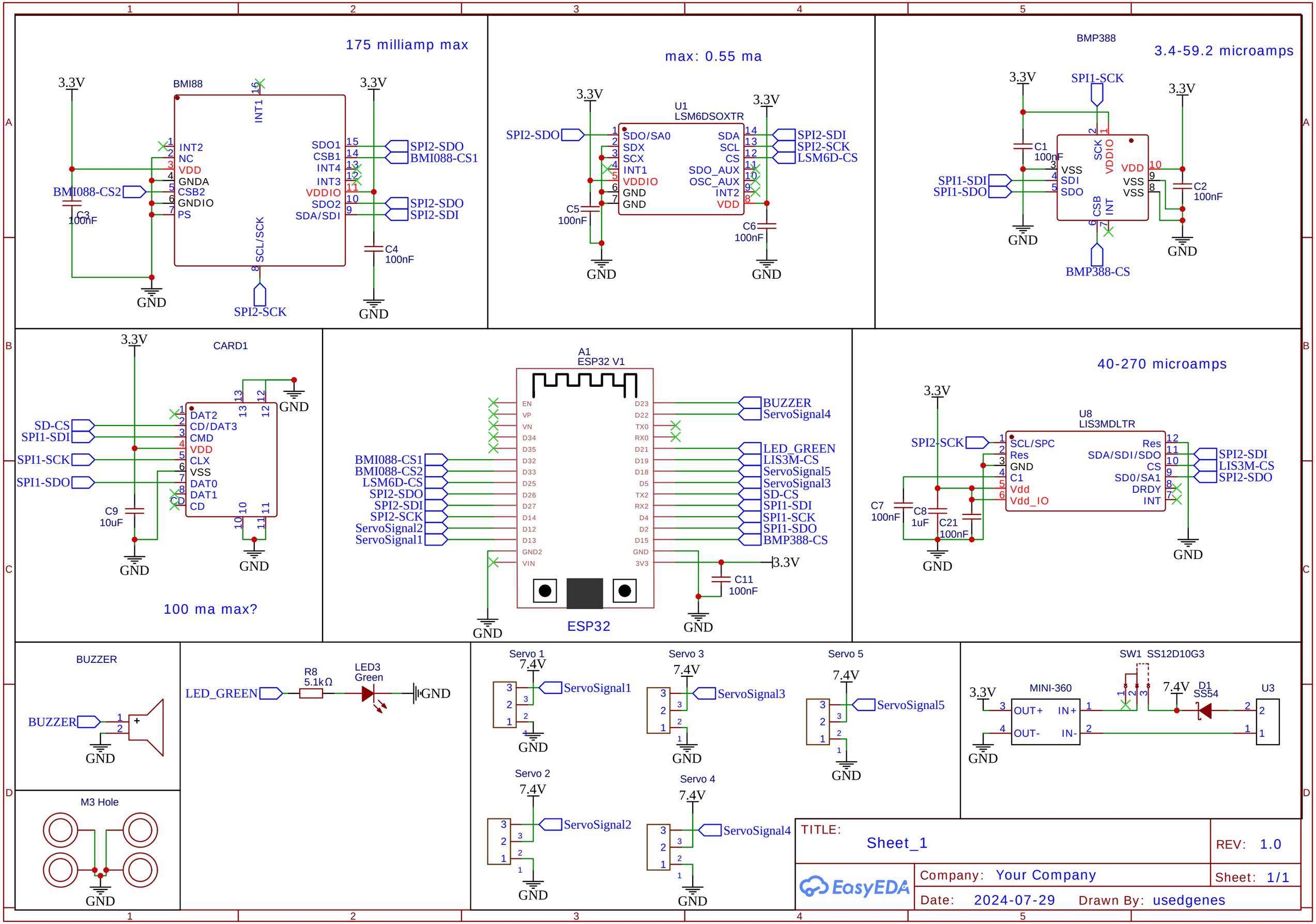
175 milliamp max
BMI88
3.3V
INT1
INT2
NC
VDD
GNDA
CSB2
GNDIO
PS
SDO1
CSB1
INT4
INT3
VDDIO
SDO2
SDA/SDI
SCL/SCK
BMI088-CS2
C3
100nF
SPI2-SDO
BMI088-CS1
SPI2-SDI
C4
100nF
GND
SPI2-SCK
max: 0.55 ma
U1
LSM6DSOXTR
SDO/SA0
SDX
SCX
INT1
VDDIO
GND
SDA
SCL
CS
SDO_AUX
OSC_AUX
INT2
VDD
SPI2-SDI
SPI2-SCK
LSM6D-CS
C5
100nF
C6
100nF
BMP388
3.4-59.2 microamps
SPI1-SCK
C1
100nF
VSS
SDI
SDO
SCK
VDDIO
VDD
VSS
VSS
CSB
INT
SPI1-SDI
SPI1-SDO
C2
100nF
BMP388-CS
CARD1
DAT2
CD/DAT3
CMD
VDD
CLX
VSS
DAT0
DAT1
CD
SD-CS
SPI1-SDI
SPI1-SCK
SPI1-SDO
C9
10uF
100 ma max?
A1
ESP32 V1
EN
VP
VN
D34
D35
D32
D33
D25
D26
D27
D14
D12
D13
GND2
VIN
D23
D22
TX0
RX0
D21
D19
D18
D5
TX2
RX2
D4
D2
D15
GND
3V3
BMI088-CS1
BMI088-CS2
LSM6D-CS
SPI2-SDO
SPI2-SDI
SPI2-SCK
ServoSignal2
ServoSignal1
BUZZER
ServoSignal4
LED_GREEN
LIS3M-CS
ServoSignal5
ServoSignal3
SD-CS
SPI1-SDI
SPI1-SCK
SPI1-SDO
BMP388-CS
C11
100nF
ESP32
40-270 microamps
U8
LIS3MDLTR
SCL/SPC
Res
GND
C1
Vdd
Vdd_IO
SDA/SDI/SDO
CS
SD0/SA1
DRDY
INT
SPI2-SCK
SPI2-SDI
LIS3M-CS
SPI2-SDO
C7
100nF
C8
1uF
C21
100nF
BUZZER
M3 Hole
LED_GREEN
R8
5.1kΩ
LED3
Green
Servo 1
Servo 2
Servo 3
Servo 4
Servo 5
7.4V
ServoSignal1
ServoSignal2
ServoSignal3
ServoSignal4
ServoSignal5
SW1 SS12D10G3
MINI-360
OUT+
OUT-
IN+
IN-
D1
SS54
U3
TITLE:
Sheet_1
REV: 1.0
Company: Your Company
Sheet: 1/1
Date: 2024-07-29
Drawn By: usedgenes
EasyEDA