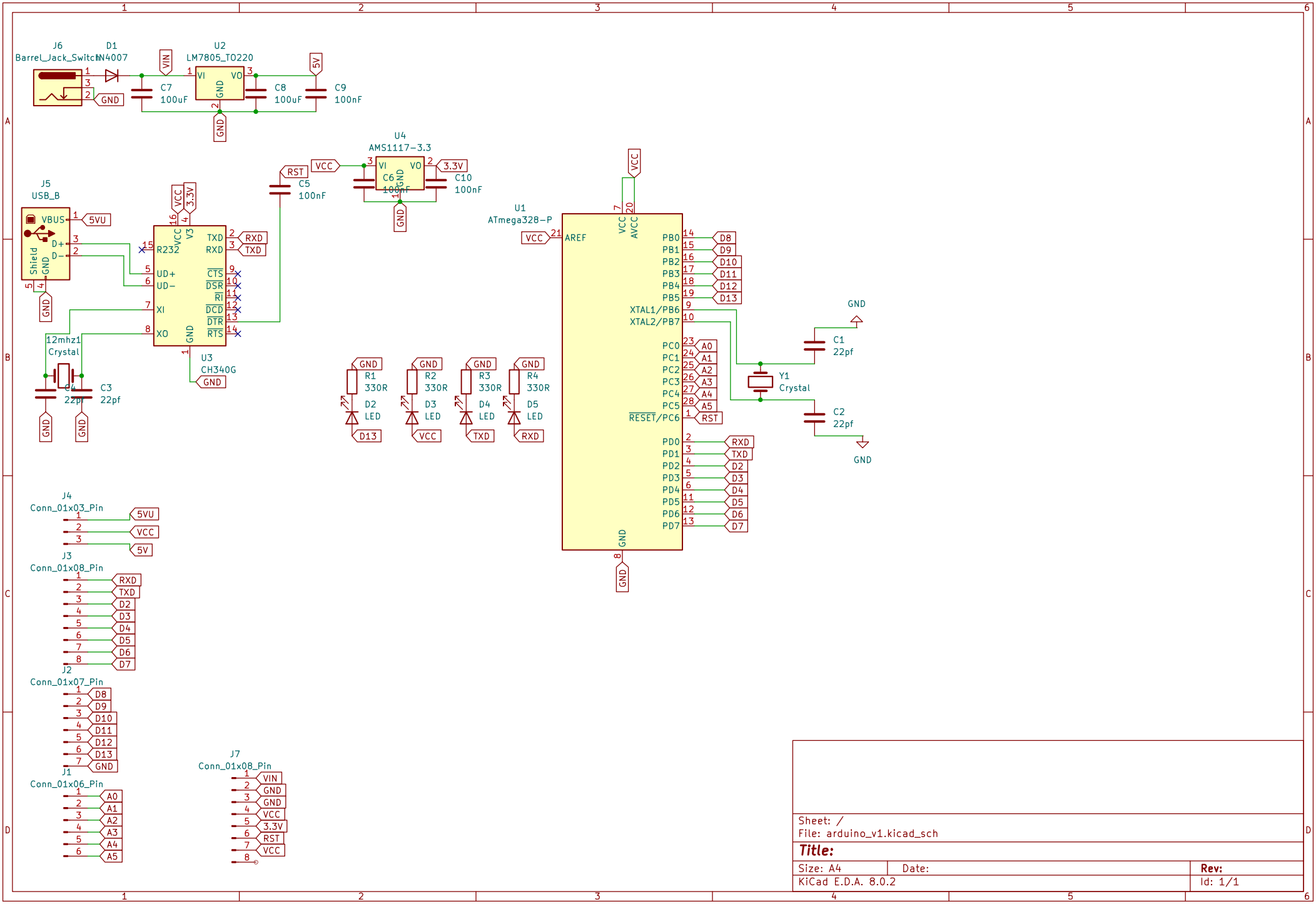
J6
Barrel_Jack_Switch
D1
1N4007
U2
LM7805_TO220
VI
VO
GND
VIN
5V
C7
100uF
C8
100uF
C9
100nF
U4
AMS1117-3.3
C6
100nF
C10
100nF
3.3V
RST
C5
100nF
J5
USB_B
VBUS
D+
D-
Shield
5VU
U3
CH340G
R232
TXD
RXD
CTS
DSR
RI
DCD
DTR
RTS
UD+
UD-
XI
XO
12mhz1
Crystal
C4
22pf
C3
22pf
U1
ATmega328-P
AREF
VCC
AVCC
PB0
PB1
PB2
PB3
PB4
PB5
XTAL1/PB6
XTAL2/PB7
PC0
PC1
PC2
PC3
PC4
PC5
RESET/PC6
PD0
PD1
PD2
PD3
PD4
PD5
PD6
PD7
D8
D9
D10
D11
D12
D13
A0
A1
A2
A3
A4
A5
RXD
TXD
D2
D3
D4
D5
D6
D7
Y1
Crystal
C1
22pf
C2
22pf
R1
330R
R2
330R
R3
330R
R4
330R
D2
LED
D3
LED
D4
LED
D5
LED
J4
Conn_01x03_Pin
J3
Conn_01x08_Pin
J2
Conn_01x07_Pin
J1
Conn_01x06_Pin
J7
Conn_01x08_Pin
Sheet: /
File: arduino_v1.kicad_sch
Title:
Size: A4
Date:
Rev:
KiCad E.D.A. 8.0.2
Id: 1/1