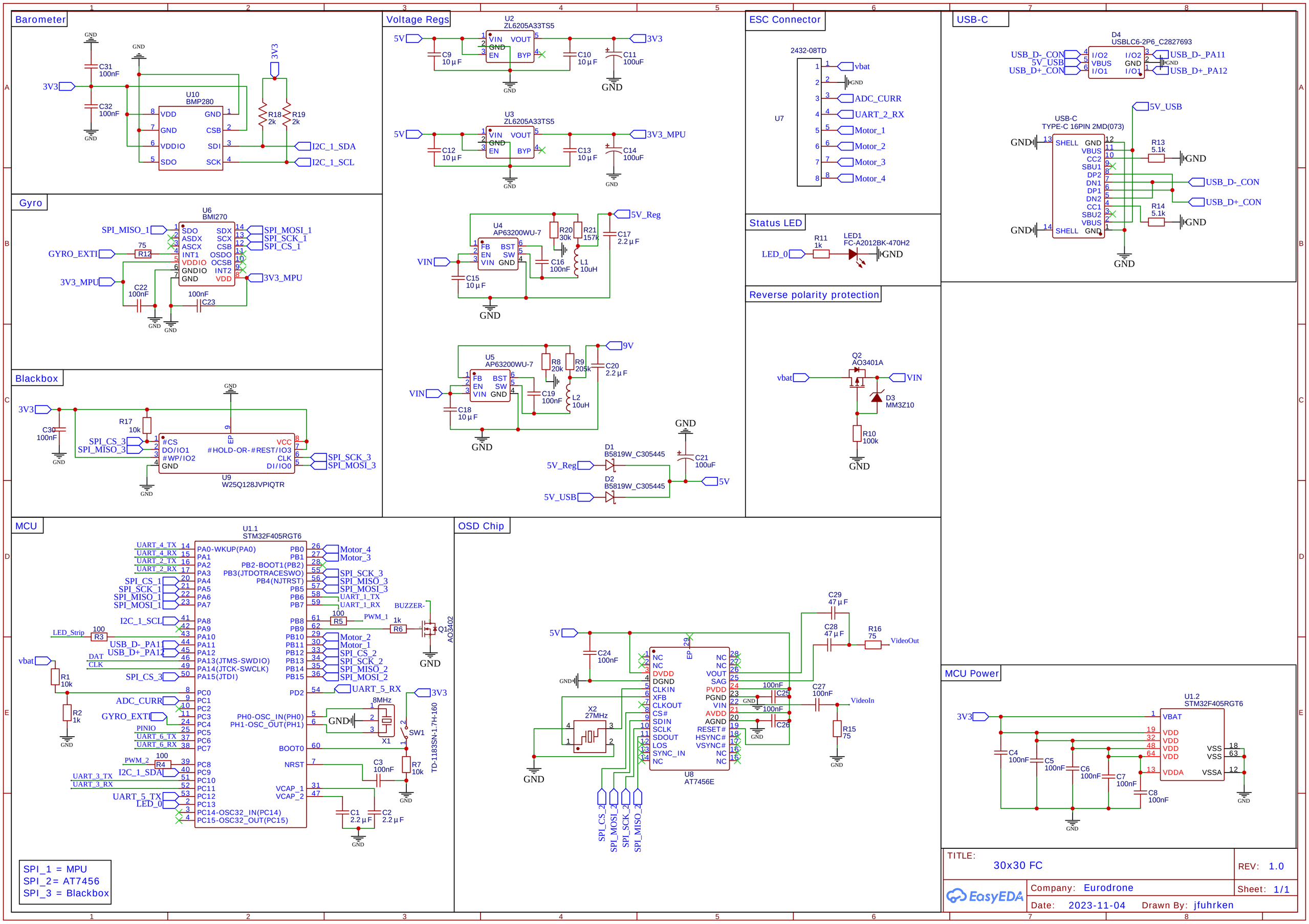
Barometer
U10
BMP280
VDD
GND
VDDIO
SDO
CSB
SDI
SCK
C31
100nF
C32
100nF
R18
2k
R19
2k
3V3
I2C_1_SDA
I2C_1_SCL
Gyro
U6
BMI270
SDO
ASDX
ASCX
INT1
VDDIO
GNDIO
SDX
SCX
CSB
OSDO
OCSB
INT2
VDD
SPI_MISO_1
GYRO_EXTI
3V3_MPU
SPI_MOSI_1
SPI_SCK_1
SPI_CS_1
R12
75
C22
100nF
C23
100nF
Blackbox
U9
W25Q128JVPIQTR
#CS
DO/IO1
#WP/IO2
GND
VCC
#HOLD-OR-#REST/IO3
CLK
DI/IO0
EP
SPI_CS_3
SPI_MISO_3
SPI_SCK_3
SPI_MOSI_3
R17
10k
C30
100nF
Voltage Regs
U2
ZL6205A33TS5
VIN
GND
EN
VOUT
BYP
5V
3V3
C9
10µF
C10
10µF
C11
100uF
U3
ZL6205A33TS5
3V3_MPU
C12
10µF
C13
10µF
C14
100uF
U4
AP63200WU-7
FB
EN
VIN
BST
SW
GND
5V_Reg
R20
30k
R21
157k
C15
10µF
C16
100nF
L1
10uH
C17
2.2µF
U5
AP63200WU-7
9V
R8
20k
R9
205k
C18
10µF
C19
100nF
L2
10uH
C20
2.2µF
D1
B5819W_C305445
D2
B5819W_C305445
5V_USB
C21
100uF
ESC Connector
2432-08TD
U7
vbat
ADC_CURR
UART_2_RX
Motor_1
Motor_2
Motor_3
Motor_4
Status LED
R11
1k
LED1
FC-A2012BK-470H2
LED_0
Reverse polarity protection
Q2
AO3401A
D3
MM3Z10
R10
100k
USB-C
D4
USBLC6-2P6_C2827693
I/O2
VBUS
I/O1
USB_D-_CON
5V_USB
USB_D+_CON
USB_D-_PA11
USB_D+_PA12
USB-C
TYPE-C 16PIN 2MD(073)
SHELL
CC2
SBU1
DP2
DN1
DP1
DN2
CC1
SBU2
R13
5.1k
R14
5.1k
MCU
U1.1
STM32F405RGT6
UART_4_TX
UART_4_RX
UART_2_TX
UART_2_RX
SPI_CS_1
SPI_SCK_1
SPI_MISO_1
SPI_MOSI_1
I2C_1_SCL
LED_Strip
R3
USB_D-_PA11
USB_D+_PA12
DAT
CLK
SPI_CS_3
ADC_CURR
GYRO_EXTI
PINIO
UART_6_TX
UART_6_RX
PWM_2
R4
I2C_1_SDA
UART_3_TX
UART_3_RX
UART_5_TX
LED_0
R1
10k
R2
1k
PA0-WKUP(PA0)
PB2-BOOT1(PB2)
PB3(JTDOTRACESWO)
PB4(NJTRST)
PA13(JTMS-SWDIO)
PA14(JTCK-SWCLK)
PA15(JTDI)
PH0-OSC_IN(PH0)
PH1-OSC_OUT(PH1)
BOOT0
NRST
VCAP_1
VCAP_2
PC14-OSC32_IN(PC14)
PC15-OSC32_OUT(PC15)
Motor_4
Motor_3
SPI_SCK_3
SPI_MISO_3
SPI_MOSI_3
UART_1_TX
UART_1_RX
PWM_1
R5
BUZZER-
R6
Q1
AO3402
Motor_2
Motor_1
SPI_CS_2
SPI_SCK_2
SPI_MISO_2
SPI_MOSI_2
UART_5_RX
3V3
8MHz
X1
SW1
TD-1183SN-1.7H-160
R7
10k
C3
100nF
C1
2.2µF
C2
2.2µF
SPI_1 = MPU
SPI_2= AT7456
SPI_3 = Blackbox
OSD Chip
U8
AT7456E
NC
DVDD
DGND
CLKIN
XFB
CLKOUT
CS#
SDIN
SCLK
SDOUT
LOS
SYNC_IN
VOUT
SAG
PVDD
PGND
VIN
AVDD
AGND
RESET#
HSYNC#
VSYNC#
X2
27MHz
C24
100nF
C25
100nF
C26
100nF
C27
100nF
C28
47µF
C29
47µF
R16
75
VideoOut
VideoIn
R15
75
SPI_CS_2
SPI_MOSI_2
SPI_SCK_2
SPI_MISO_2
MCU Power
U1.2
STM32F405RGT6
VBAT
VDD
VDDA
VSS
VSSA
C4
100nF
C5
100nF
C6
100nF
C7
100nF
C8
100nF
TITLE:
30x30 FC
REV: 1.0
Company: Eurodrone
Sheet: 1/1
Date: 2023-11-04
Drawn By: jfuhrken
EasyEDA