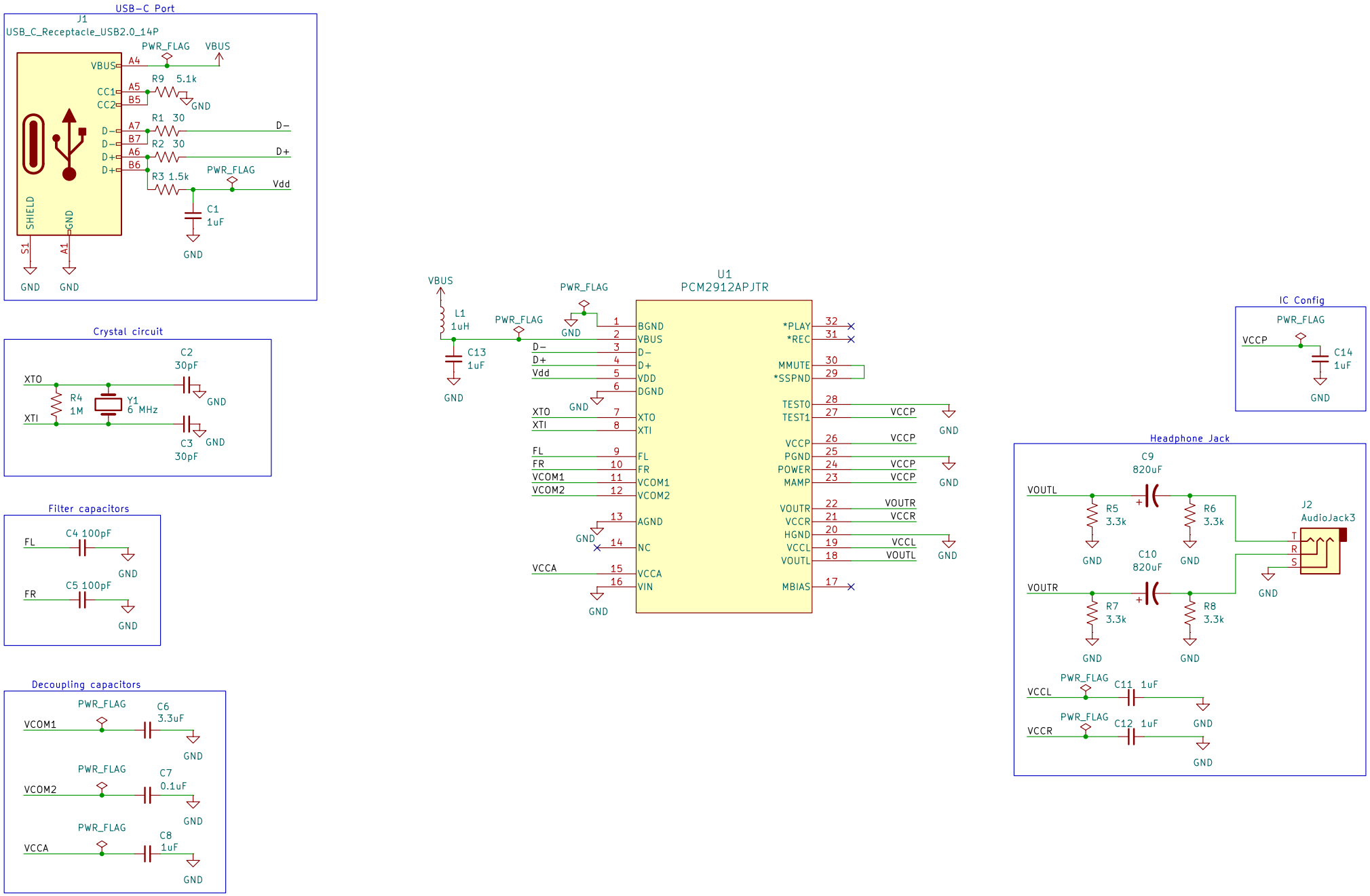
USB-C Port
J1
USB_C_Receptacle_USB2.0_14P
PWR_FLAG
VBUS
A4
R9 5.1k
A5
B5
CC1
CC2
GND
R1 30
A7
B7
D-
D-
D-
R2 30
A6
B6
D+
D+
D+
R3 1.5k
PWR_FLAG
Vdd
C1
1uF
GND
SHIELD
GND
S1
A1
GND
GND
Crystal circuit
C2
30pF
XTO
R4
1M
Y1
6 MHz
XTI
C3
30pF
GND
Filter capacitors
FL
C4 100pF
FR
C5 100pF
GND
Decoupling capacitors
VCOM1
PWR_FLAG
C6
3.3uF
VCOM2
C7
0.1uF
VCCA
C8
1uF
U1
PCM2912APJTR
VBUS
L1
1uH
C13
1uF
BGND
VBUS
D-
D+
VDD
DGND
XTO
XTI
FL
FR
VCOM1
VCOM2
AGND
NC
VCCA
VIN
*PLAY
*REC
MMUTE
*SSPND
TEST0
TEST1
VCCP
PGND
POWER
MAMP
VOUTR
VCCR
HGND
VCCL
VOUTL
MBIAS
IC Config
PWR_FLAG
VCCP
C14
1uF
Headphone Jack
C9
820uF
VOUTL
R5
3.3k
R6
3.3k
J2
AudioJack3
T
R
S
C10
820uF
VOUTR
R7
3.3k
R8
3.3k
VCCL
C11 1uF
VCCR
C12 1uF