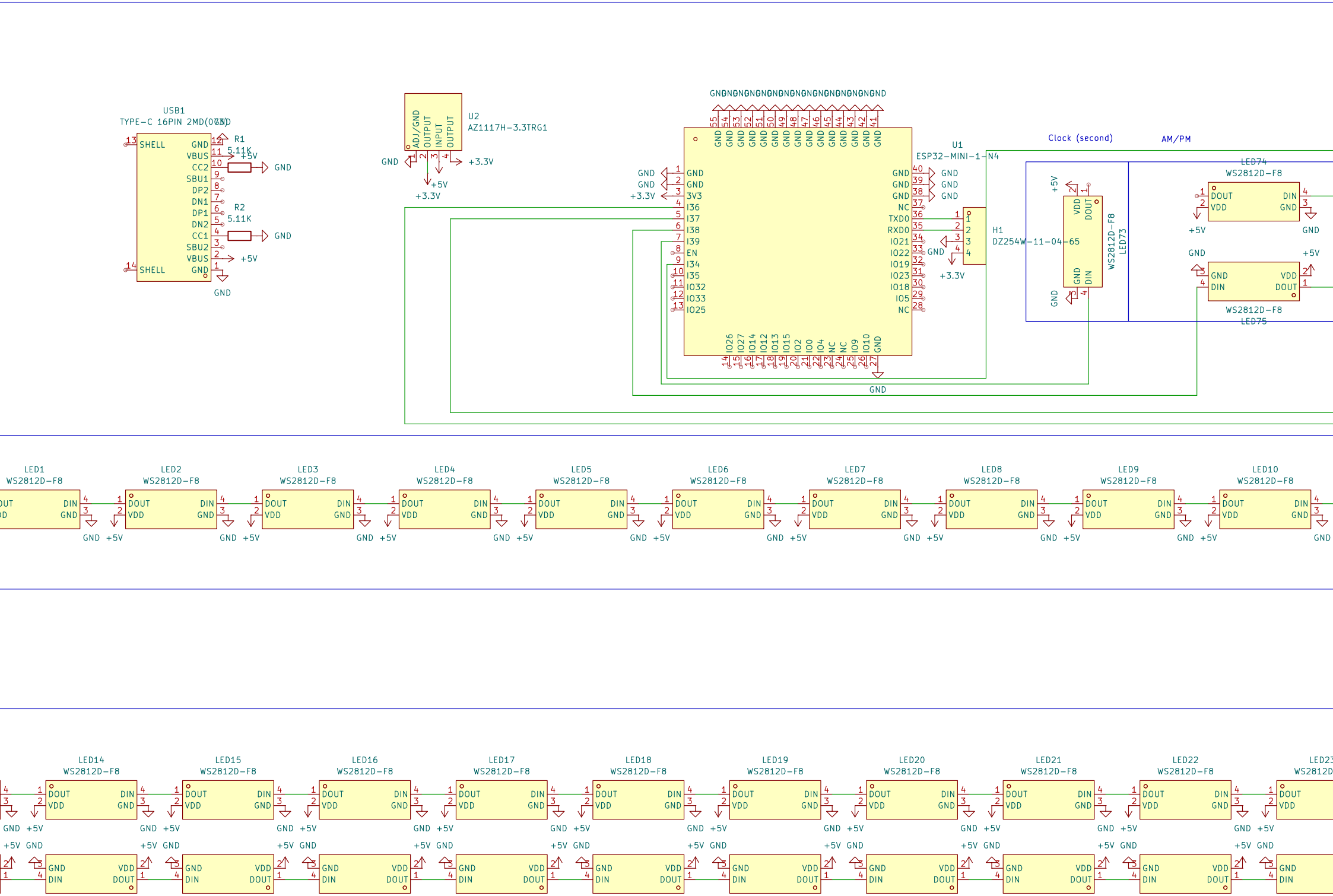
USB1
TYPE-C 16PIN 2MD(073)
SHELL
GND
VBUS
CC2
SBU1
DP2
DN1
DP1
DN2
CC1
SBU2
VBUS
SHELL
GND
R1
5.11K
R2
5.11K
+5V
GND
U2
AZ1117H-3.3TRG1
ADJ/GND
OUTPUT
INPUT
OUTPUT
+3.3V
U1
ESP32-MINI-1-N4
3V3
I36
I37
I38
I39
EN
I34
I35
IO32
IO33
IO25
IO26
IO27
IO14
IO12
IO13
IO15
IO2
IO0
IO4
NC
NC
IO9
IO10
TXD0
RXD0
IO21
IO22
IO19
IO23
IO18
IO5
NC
H1
DZ254W-11-04-65
Clock (second)
AM/PM
LED74
WS2812D-F8
LED73
LED75
DOUT
DIN
VDD
LED1
LED2
LED3
LED4
LED5
LED6
LED7
LED8
LED9
LED10
LED14
LED15
LED16
LED17
LED18
LED19
LED20
LED21
LED22
LED23