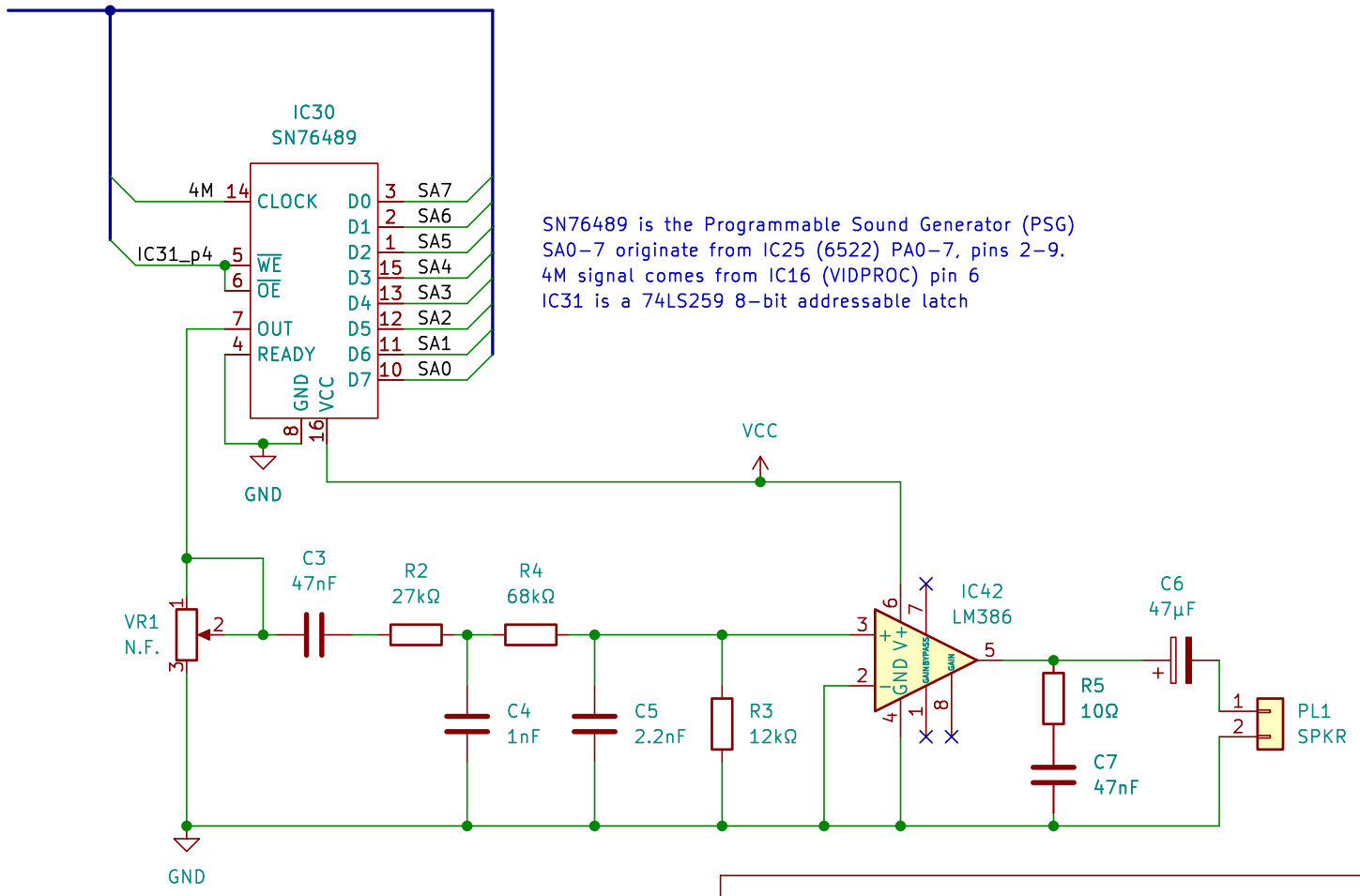

SN76489 is the Programmable Sound Generator (PSG)
SA0-7 originate from IC25 (6522) PA0-7, pins 2-9.
4M signal comes from IC16 (VIDPROC) pin 6
IC31 is a 74LS259 8-bit addressable latch

Brett Hallen

Sheet: /
File: Master_Compact_Audio.kicad_sch

Title: BBC Master Compact Audio Stage

Size: A5	Date: 2-DEC-2024	**Rev:**
KiCad E.D.A. 8.0.6		Id: 1/1