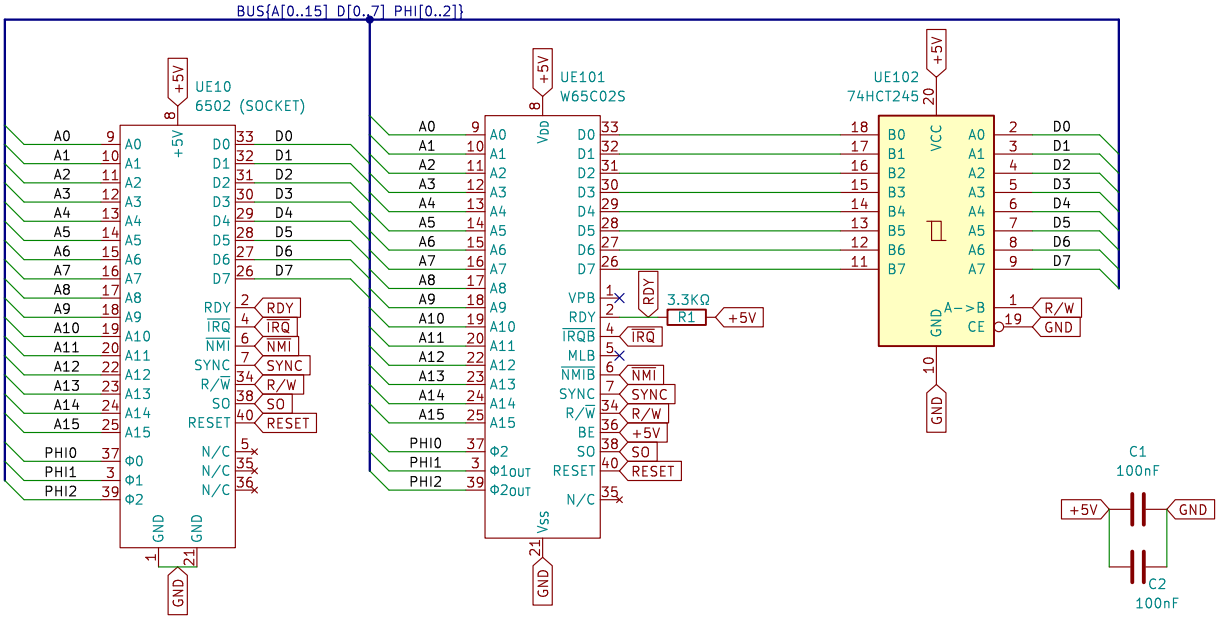

Notes:
Pin 1 (VPB, Vector Pull) should disconnected
Pin 2 (RDY, Ready) should be pulled up to +5V with 3.3KΩ resistor
Pin 5 (MLB, Memory Lock) should be disconnected (N/C on 6502)
Pin 36 (BE, Bus Enable) should be tied to +5V (N/C on 6502)
Data bus needs a 74HCT245 transceiver for reliable operation

www.youtube.com/@Brfff
Brett Hallen

Sheet: /
File: 6502-to-65C02.kicad_sch

Title: 6502-to-W65C02S for VIC-20

Size: A5	Date: 26-Apr-2025	**Rev: A**
KiCad E.D.A. 9.0.0		Id: 1/1