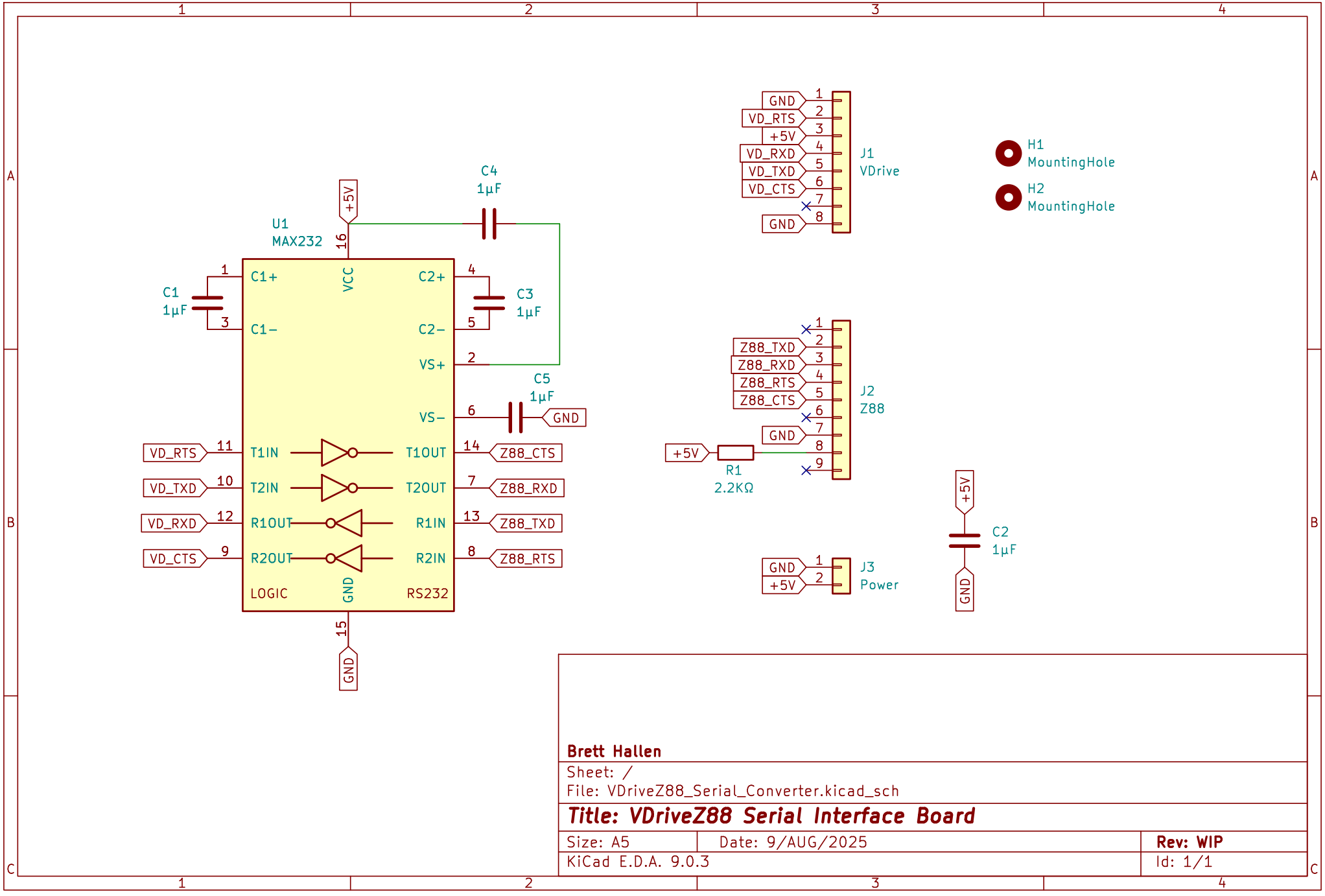

Brett Hallen

Sheet: /

File: VDriveZ88_Serial_Converter.kicad_sch

Title: VDriveZ88 Serial Interface Board

Size: A5	Date: 9/AUG/2025	**Rev: WIP**
KiCad E.D.A. 9.0.3		Id: 1/1