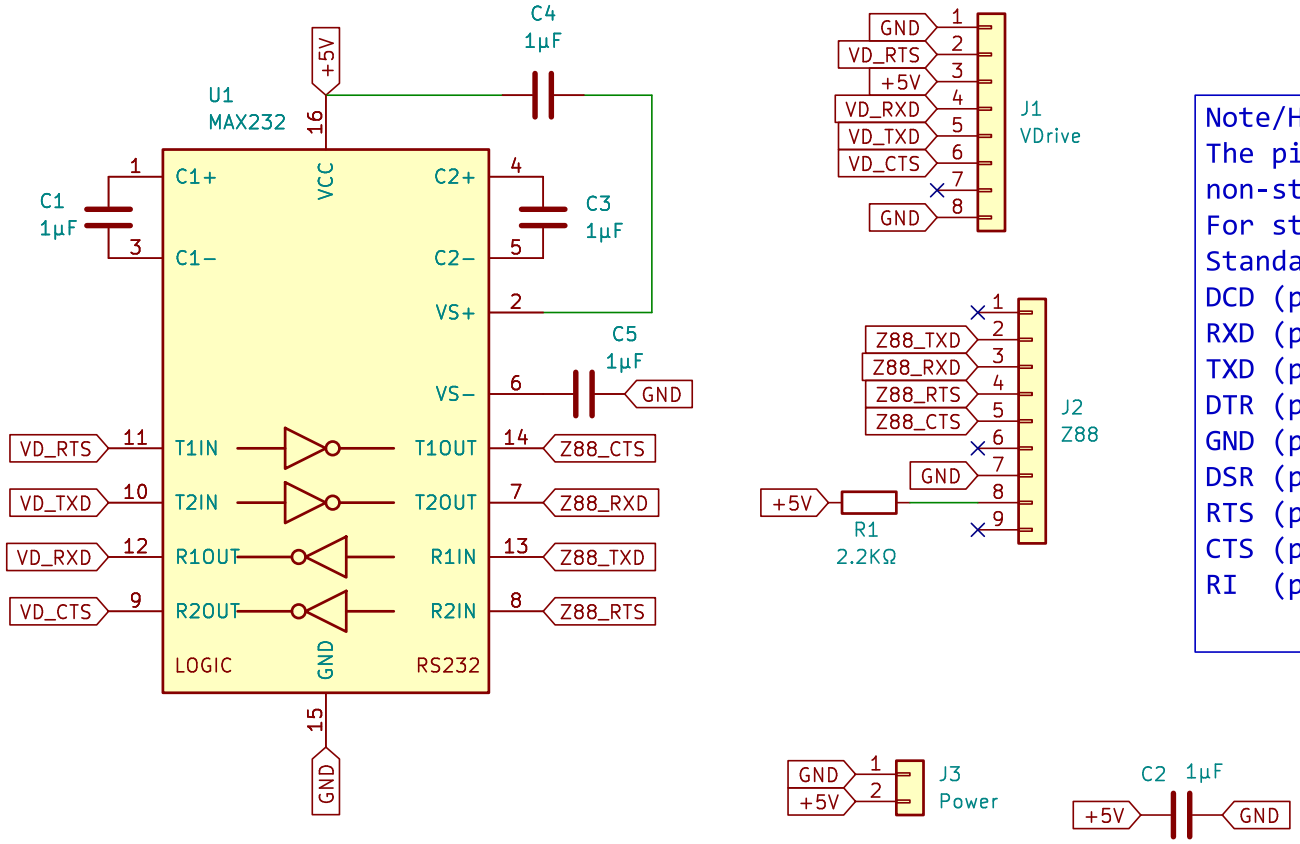

Note/Huom!
The pin numbering uses the Z88's non-standard DE9 RS232 numbering.
For standard RS232 numbering:

Standard	Z88
DCD (pin 1) ->	pin 8
RXD (pin 2) ->	pin 3
TXD (pin 3) ->	pin 2
DTR (pin 4) ->	not connected
GND (pin 5) ->	pin 7
DSR (pin 6) ->	pin 8
RTS (pin 7) ->	pin 4
CTS (pin 8) ->	pin 5
RI (pin 9) ->	not connected

H1
MountingHole

H2
MountingHole

Mounting holes: M2
Capacitors: 2.5mm pitch
VDrive connector: 1x8−way 2mm pitch
Z88 Serial connector 1x9−way 2.54mm pitch

Brett Hallen

Sheet: /
File: VDriveZ88_Serial_Converter.kicad_sch

Title: VDriveZ88 Serial Interface Board

Size: A5	Date: 9/AUG/2025	**Rev: WIP**
KiCad E.D.A. 9.0.3		Id: 1/1