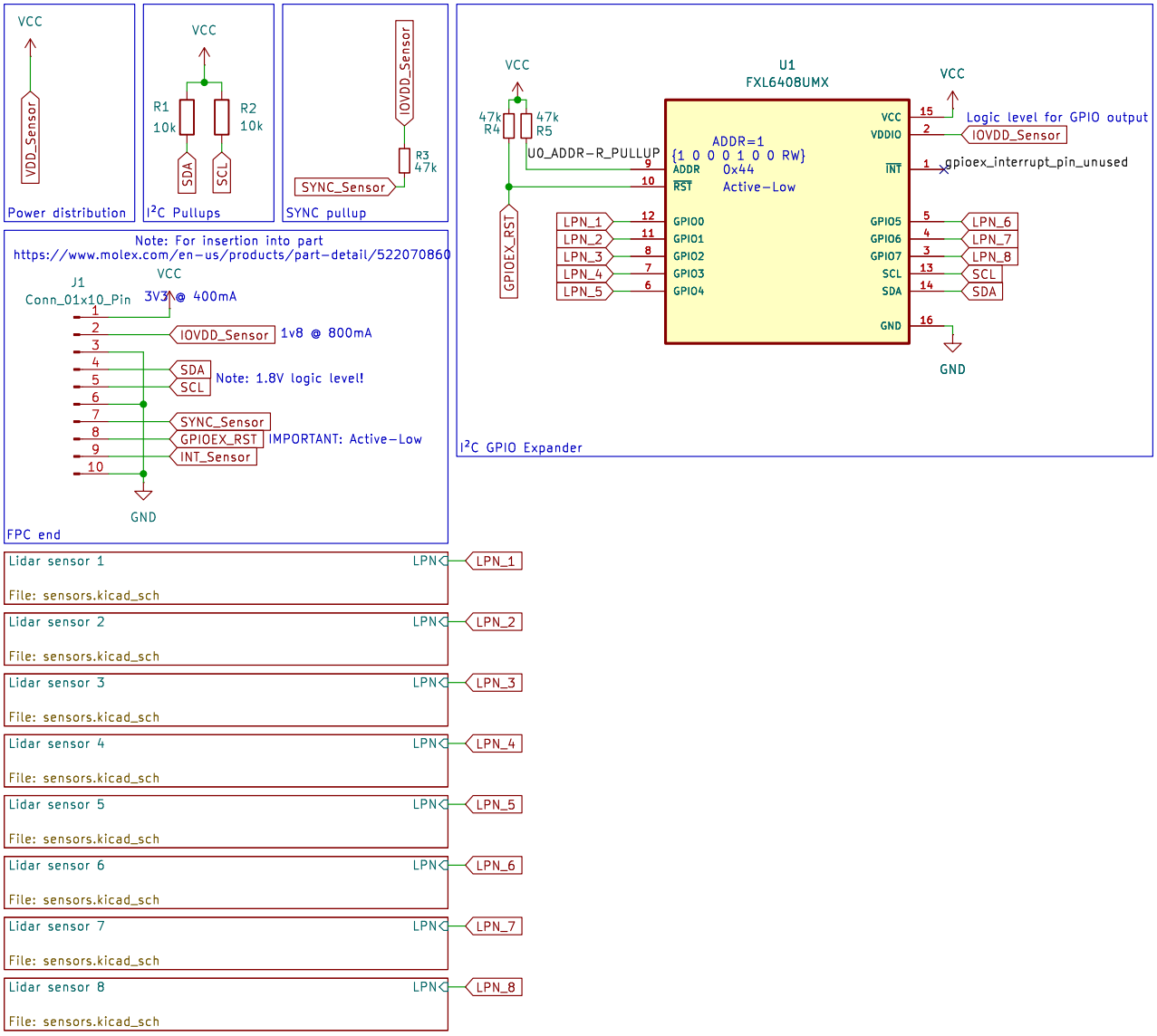

Dominik Powell
University of York

Sheet: /
File: sensor_board.kicad_sch

Title: Low-Cost LIDAR

Size: A4	Date: 2025-09-10	**Rev: 0.0.1**
KiCad E.D.A. 9.0.9		Id: 1/9

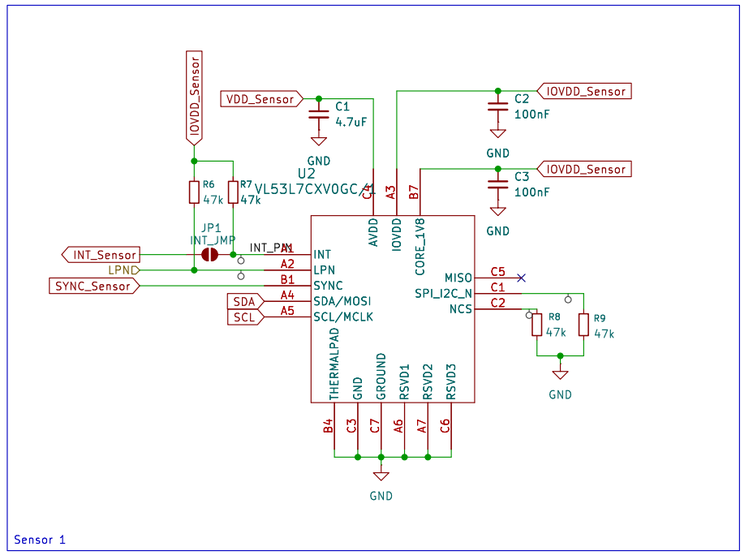

Dominik Powell
University of York

Sheet: /Lidar sensor 1/
File: sensors.kicad_sch

Title: Sensor Page

Size: A3	Date: 2025-09-10	**Rev: 0.0.1**
KiCad E.D.A. 9.0.9		Id: 2/9

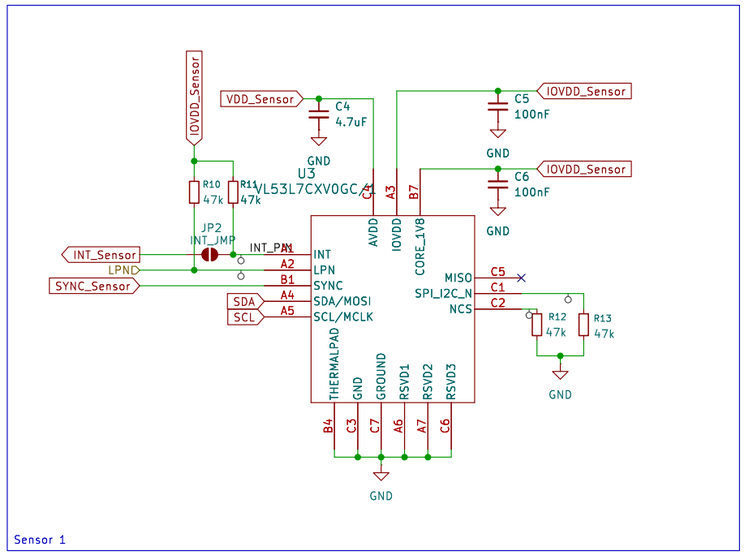

Dominik Powell
University of York

Sheet: /Lidar sensor 2/
File: sensors.kicad_sch

Title: Sensor Page

Size: A3	Date: 2025-09-10	**Rev: 0.0.1**
KiCad E.D.A. 9.0.9		Id: 3/9

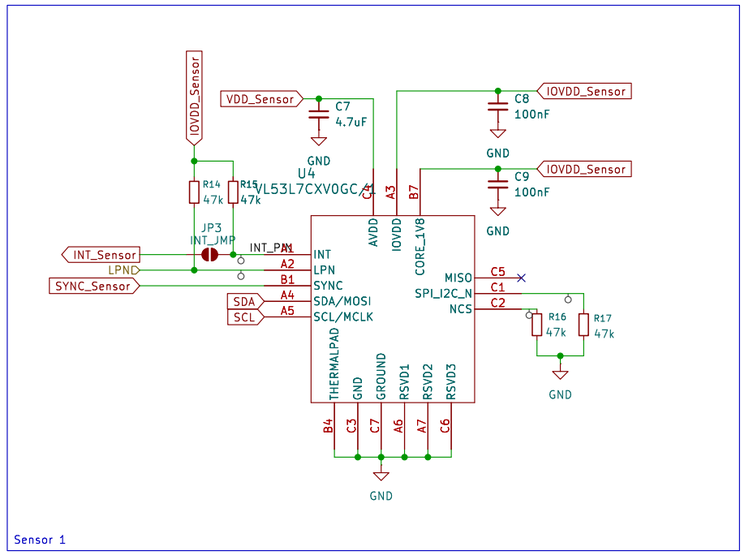

Dominik Powell
University of York

Sheet: /Lidar sensor 3/
File: sensors.kicad_sch

Title: Sensor Page

Size: A3	Date: 2025-09-10	**Rev: 0.0.1**
KiCad E.D.A. 9.0.9		Id: 4/9

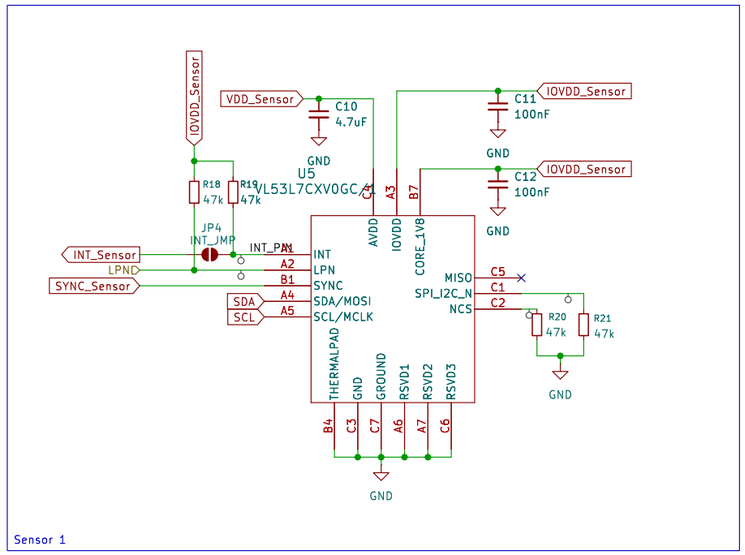

Dominik Powell
University of York

Sheet: /Lidar sensor 4/
File: sensors.kicad_sch

Title: Sensor Page

Size: A3	Date: 2025-09-10	**Rev: 0.0.1**
KiCad E.D.A. 9.0.9		Id: 5/9

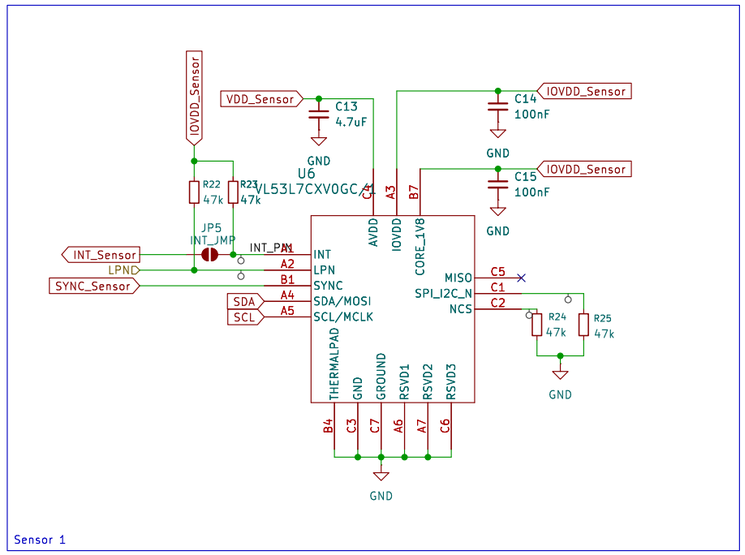

Dominik Powell
University of York

Sheet: /Lidar sensor 5/
File: sensors.kicad_sch

Title: Sensor Page

Size: A3	Date: 2025-09-10	**Rev: 0.0.1**
KiCad E.D.A. 9.0.9		Id: 6/9

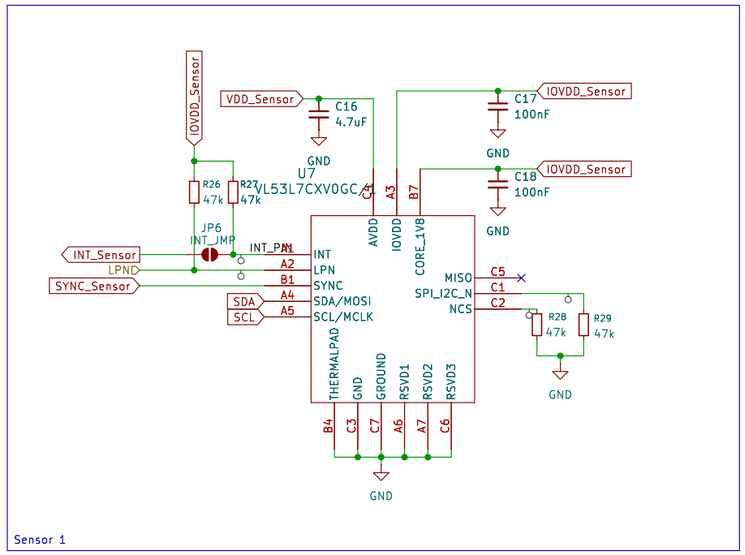

Dominik Powell
University of York

Sheet: /Lidar sensor 6/
File: sensors.kicad_sch

Title: Sensor Page

Size: A3	Date: 2025-09-10	**Rev: 0.0.1**
KiCad E.D.A. 9.0.9		Id: 7/9

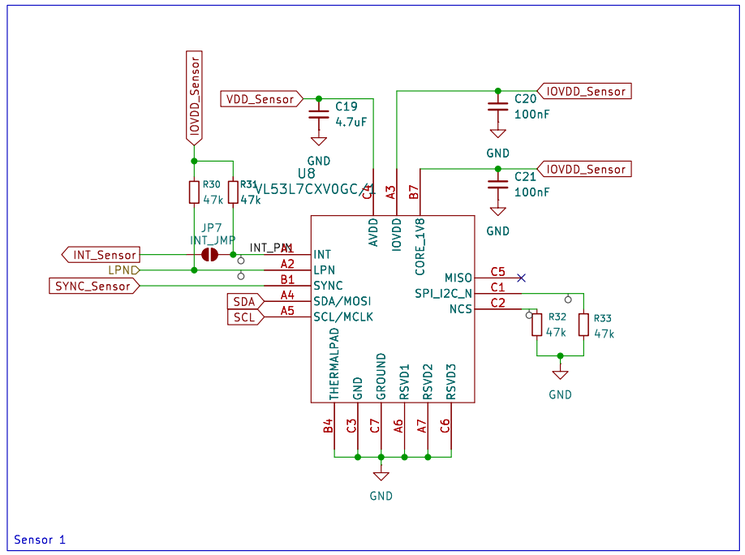

Dominik Powell
University of York

Sheet: /Lidar sensor 7/
File: sensors.kicad_sch

Title: Sensor Page

Size: A3	Date: 2025-09-10	**Rev: 0.0.1**
KiCad E.D.A. 9.0.9		Id: 8/9

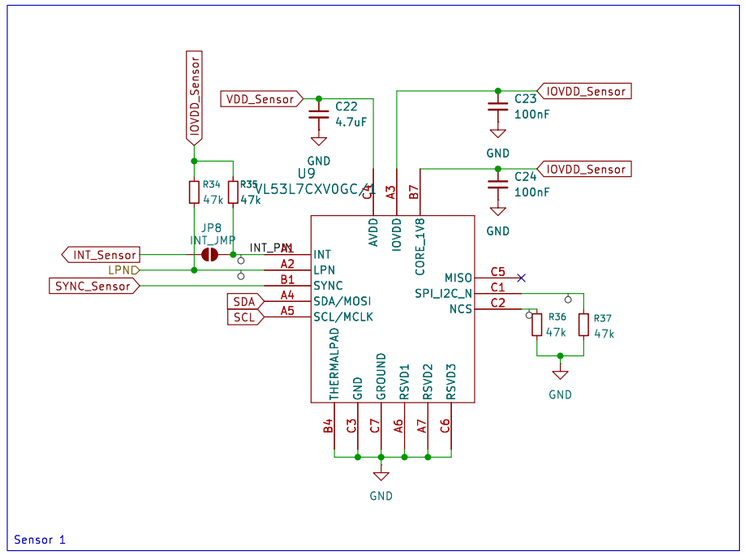

Dominik Powell
University of York

Sheet: /Lidar sensor 8/
File: sensors.kicad_sch

Title: Sensor Page

Size: A3	Date: 2025-09-10	**Rev: 0.0.1**
KiCad E.D.A. 9.0.9		Id: 9/9