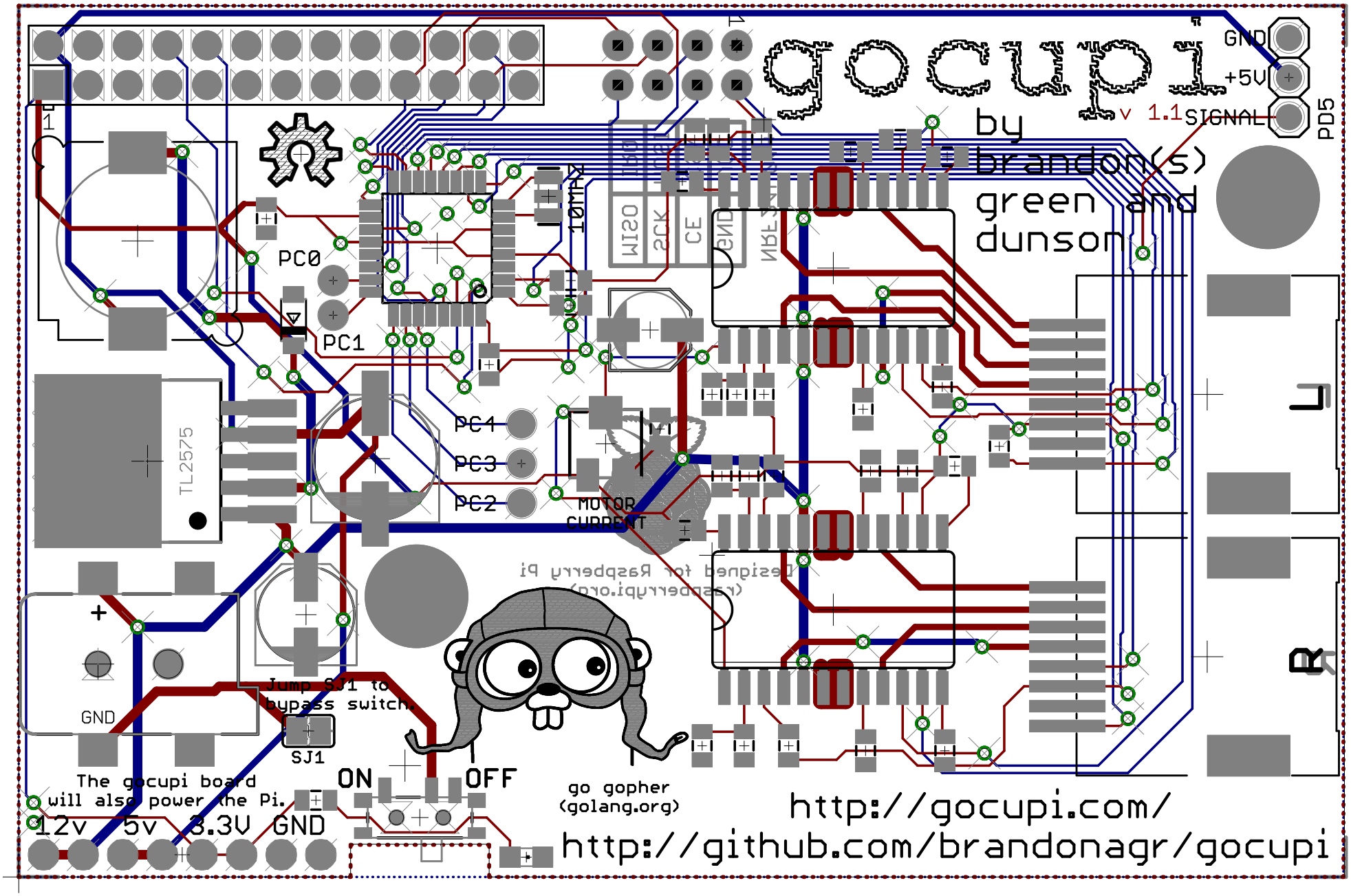
gocupi
v 1.1
by
brandon(s)
green and
dunson
GND
+5V
SIGNAL
PD5
PC0
PC1
PC4
PC3
PC2
TL2575
MOTOR
CURRENT
Jump SJ1 to
bypass switch.
SJ1
GND
+
ON
OFF
The gocupi board
will also power the Pi.
12v
5v
3.3V
GND
go gopher
(golang.org)
http://gocupi.com/
http://github.com/brandonagr/gocupi
L
R