ONLINE MASTERS IN **DATA SCIENCE**

DSC258: NATURAL LANGUAGE PROCESSING

DENSE VECTOR REPRESENTATIONS

UC San Diego

COMPUTER SCIENCE & ENGINEERING

HALICIOĞLU DATA SCIENCE INSTITUTE

OUTLINE

Word Embedding

- Traditional Distributional Representation
- **Dense Vector Representations**
- Interesting Properties of Word Vectors
- Applying Word Embeddings

Dense Vector Representations

Previous Word Representation

Sparse long vectors (dimensions = |V| or |D|)

- |V| is tens of thousands
- Dimensions are not interpretable

Word Embedding

Dense Vectors

- Short: Dimensions 50-1000
- Real numbers (could be +ve or –ve)
- Has been shown to work better
- Can help with generalization because of fewer dimensions

Word Embeddings

Two Ways to Interpret the Hypothesis

Translation 1: Given context words, can we predict the missing word?

- Continuous Bag of Words (CBOW)
- P(w | c1, c2, …, cm)

Translation 2: Given the word, can we predict its contexts?

- Skip-Gram
- P(c | w)

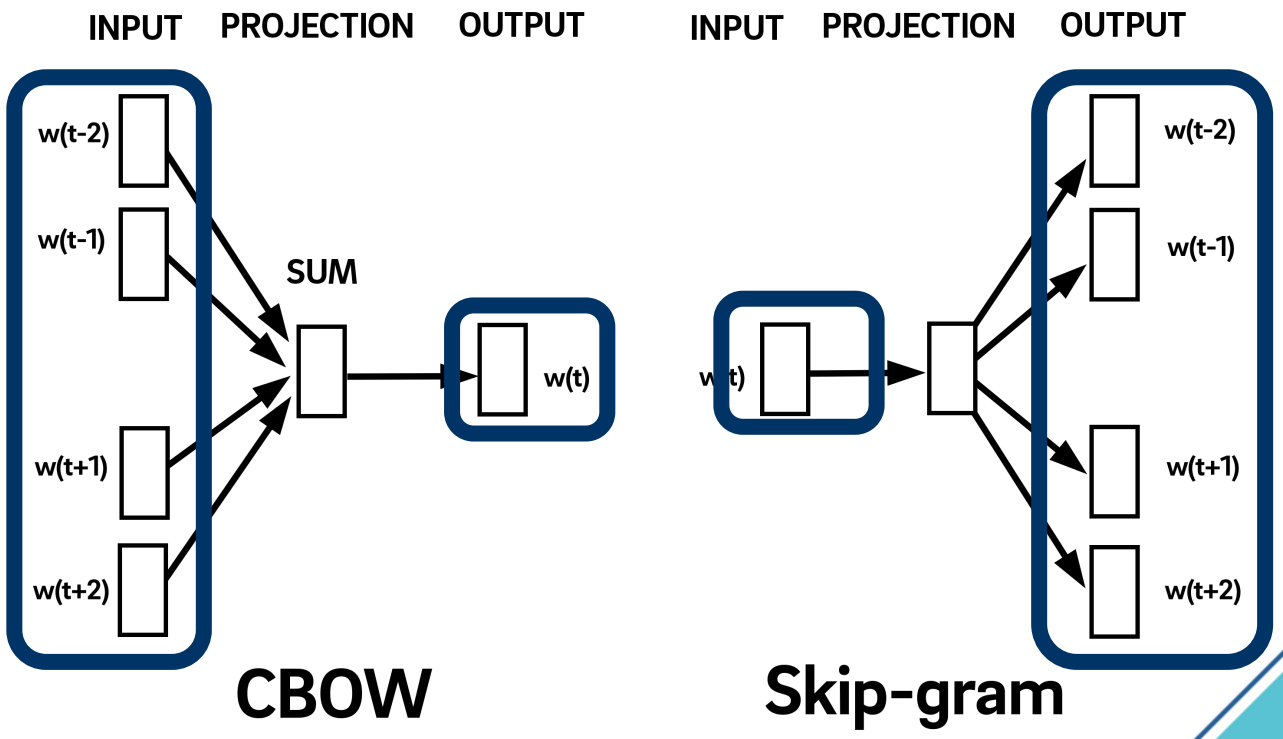

Mikolov, Tomas, Quoc V. Le, and Ilya Sutskever. "Exploiting similarities among languages for machine translation." *arXiv preprint arXiv:1309.4168* (2013).

Skip-gram

Given the word, can we predict its contexts?

$$L(\theta) = \prod_{t=1}^{T} \prod_{\substack{-m \le j \le m \\ j \ne 0}} P(w_{t+j} | w_t; \theta)$$

Maximize data likelihood

θ: all variables in our model that need to be optimized

m: window size

w_t: center word

Self-supervised

Source: https://bit.ly/3hqPhjA

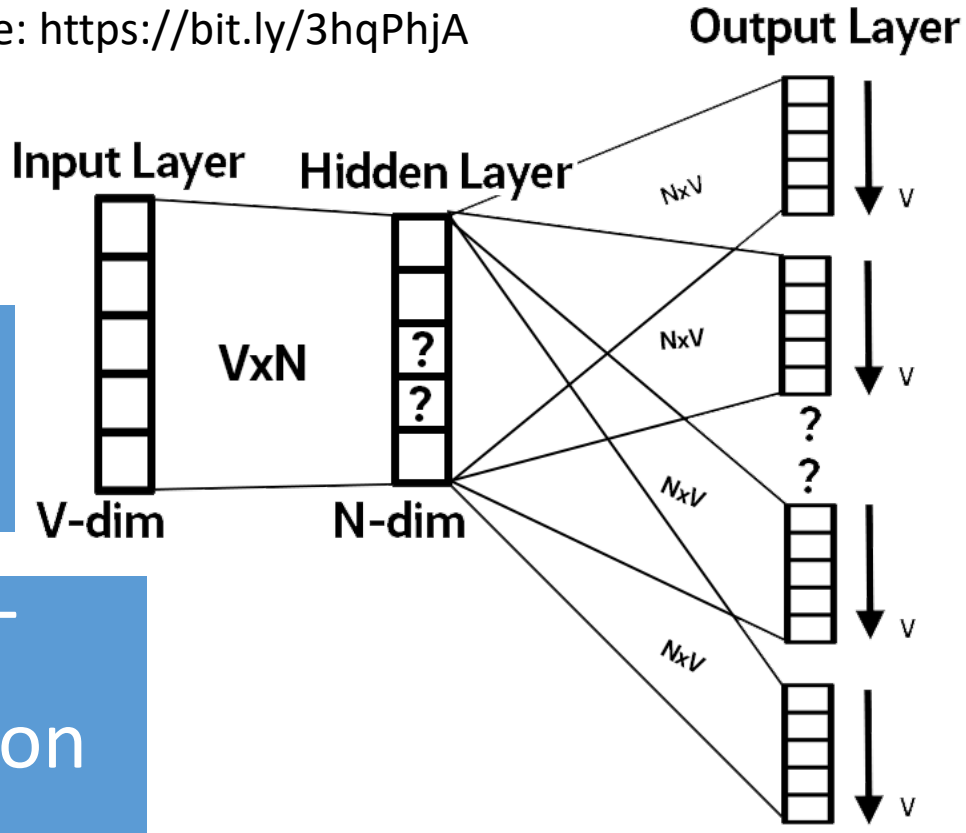

Skip-gram

Given the word, can we predict its contexts?

Maximize Likelihood

$$L(\theta) = \prod_{t=1}^{T} \prod_{\substack{-m \le j \le m \\ j \ne 0}} P(w_{t+j} | w_t; \theta)$$

t = 1, ……, T
each position
in corpus

Objective function (Cost/Loss) $J(\theta)$ is the avg. log likelihood

Minimize Cost/Loss

$$J(\theta) = -\frac{1}{T} \log(L(\theta)) = -\frac{1}{T} \sum_{t=1}^{T} \sum_{\substack{-m \le j \le m \\ j \ne 0}} \log(P(w_{t+j} | w_t; \theta))$$

Minimize

Skip-gram

$$J(\theta) = -\frac{1}{T}\log\big(L(\theta)\big) = -\frac{1}{T}\sum_{t=1}^{T}\sum_{\substack{-m\le j\le m\\ j\neq 0}}\log(P\big(w_{t+j}\big|w_t;\theta))$$

How can we calculate $P\big(w_{t+j}\big|w_t;\theta\big)$?

Base this probability on embedding similarity

$P\big(w_{t+j}\big|w_t\big)$ should be high if w_t and w_{t+j} are likely to co-occur

Embeddings for both $\mathrm{w_{t+j}}$ and $\mathrm{w_t}$ are similar

Two embedding vectors are similar if they have a high dot product

$$\mathrm{Similarity}\big(\mathrm{w_{t+j}}, \mathrm{w_t}\big) \approx \overrightarrow{\mathrm{w_{t+j}}} \cdot \overrightarrow{\mathrm{w_t}}$$

Minimize

Skip-gram

$$J(\theta) = -\frac{1}{T}\log\big(L(\theta)\big) = -\frac{1}{T}\sum_{t=1}^{T}\sum_{\substack{-m\le j\le m\\ j\neq 0}}\log(P\big(w_{t+j}\big|w_t;\theta))$$

How can we calculate $P\big(w_{t+j}\big|w_t;\theta\big)$?

Store two vectors per word *w:*

- w_{cnt} $\rightarrow$ when w is a *center* word
- w_{cxt} $\rightarrow$ when w is a *context* word

$$\overrightarrow{w_{t+j}} \cdot \overrightarrow{w_t}$$

For a center word c and context word o

- *P(o|c) =*

A metric that captures similarity

Normalized to form a probability

Minimize

Skip-gram

$$J(\theta) = -\frac{1}{T}\log\big(L(\theta)\big) = -\frac{1}{T}\sum_{t=1}^{T}\sum_{\substack{-m\le j\le m\\ j\neq 0}}\log\big(P\big(w_{t+j}\big|w_t;\theta\big)\big)$$

How can we calculate $P\big(w_{t+j}\big|w_t;\theta\big)$?

- For a center word c and context word o
  - $P(o|c) = \dfrac{\exp(o_{cxt}\cdot c_{cnt})}{\sum_{w\in V}\exp(w_{cxt}\cdot c_{cnt})}$

Softmax function

Arbitrary Input

$$\begin{bmatrix}1.3\\5.1\\2.2\\0.7\\1.1\end{bmatrix} \longrightarrow \boxed{\frac{e^{z_i}}{\sum_{j=1}^{K} e^{z_j}}} \longrightarrow \begin{bmatrix}0.02\\0.90\\0.05\\0.01\\0.02\end{bmatrix}$$

Prob. Distribution

Source: https://bit.ly/3Ejonmz

Minimize

Skip-gram

$$J(\theta) = -\frac{1}{T}\log\big(L(\theta)\big) = -\frac{1}{T}\sum_{t=1}^{T}\sum_{\substack{-m\le j\le m\\ j\neq 0}}\log(P\big(w_{t+j}|w_t;\theta)\big)$$

Goal: Adjust word vectors gradually such as we minimize loss

θ: encapsulates all model parameters

$$\theta = \begin{bmatrix} w_1_{cxt} \\ w_2_{cxt} \\ . \\ . \\ w_V_{cxt} \\ w_1_{cnt} \\ w_2_{cnt} \\ . \\ . \\ w_V_{cnt} \end{bmatrix} \Bigg\} \text{2dV}$$

Minimize loss function using stochastic gradient descent

Skip-gram

Minimize

$$J(\theta) = -\frac{1}{T}\log\big(L(\theta)\big) = -\frac{1}{T}\sum_{t=1}^{T}\sum_{\substack{-m\le j\le m\\ j\neq 0}}\log(P\big(w_{t+j}\big|w_t;\theta))$$

$$P(o|c) = \frac{\exp(o_{cxt}\cdot c_{cnt})}{\sum_{w\in V}\exp(w_{cxt}\cdot c_{cnt})}$$

Assignment

Take the partial derivative of $J(\theta)$ w.r.t. c_{cnt}

Negative Sampling: $P^{-}(w)$

So far: Maximizing the similarity of words in the same context

$$P(o|c) = \frac{\exp(o_{cxt} \cdot c_{cnt})}{\sum_{w \in V} \exp(w_{cxt} \cdot c_{cnt})}$$

Summation over V is computationally intensive!!

Given a word and its context words, there are too many negative instances that can be used for training.
(we can pick a few)

Skip-Gram Negative Sampling Training data

…lemon, a [tablespoon of apricot jam, a] pinch…

c1 c2 [target] c3 c4

positive examples +

t	c
apricot	tablespoon
apricot	of
apricot	jam
apricot	a

negative examples -

t	c	t	c
apricot	aardvark	apricot	seven
apricot	my	apricot	forever
apricot	where	apricot	dear
apricot	coaxial	apricot	if

Negative Sampling Objective

Objective: Maximize the similarity of the target with the actual context words, and minimize the similarity of the target with the *k* negative sampled non-neighbor words.

k is a hyper-parameter
3 to 10 are all
reasonable choices

$$
\begin{aligned}
L_{CE} &= -\log\left[P(+|w,c_{pos})\prod_{i=1}^{k}P(-|w,c_{neg_i})\right] \\
&= -\left[\log P(+|w,c_{pos}) + \sum_{i=1}^{k}\log P(-|w,c_{neg_i})\right] \\
&= -\left[\log P(+|w,c_{pos}) + \sum_{i=1}^{k}\log\left(1-P(+|w,c_{neg_i})\right)\right] \\
&= -\left[\log \sigma(c_{pos}\cdot w) + \sum_{i=1}^{k}\log \sigma(-c_{neg_i}\cdot w)\right]
\end{aligned}
$$

Optimization Objective

Adjust the word weights to

- make the positive pairs more likely
- and the negative pairs less likely,
- over the entire training set.

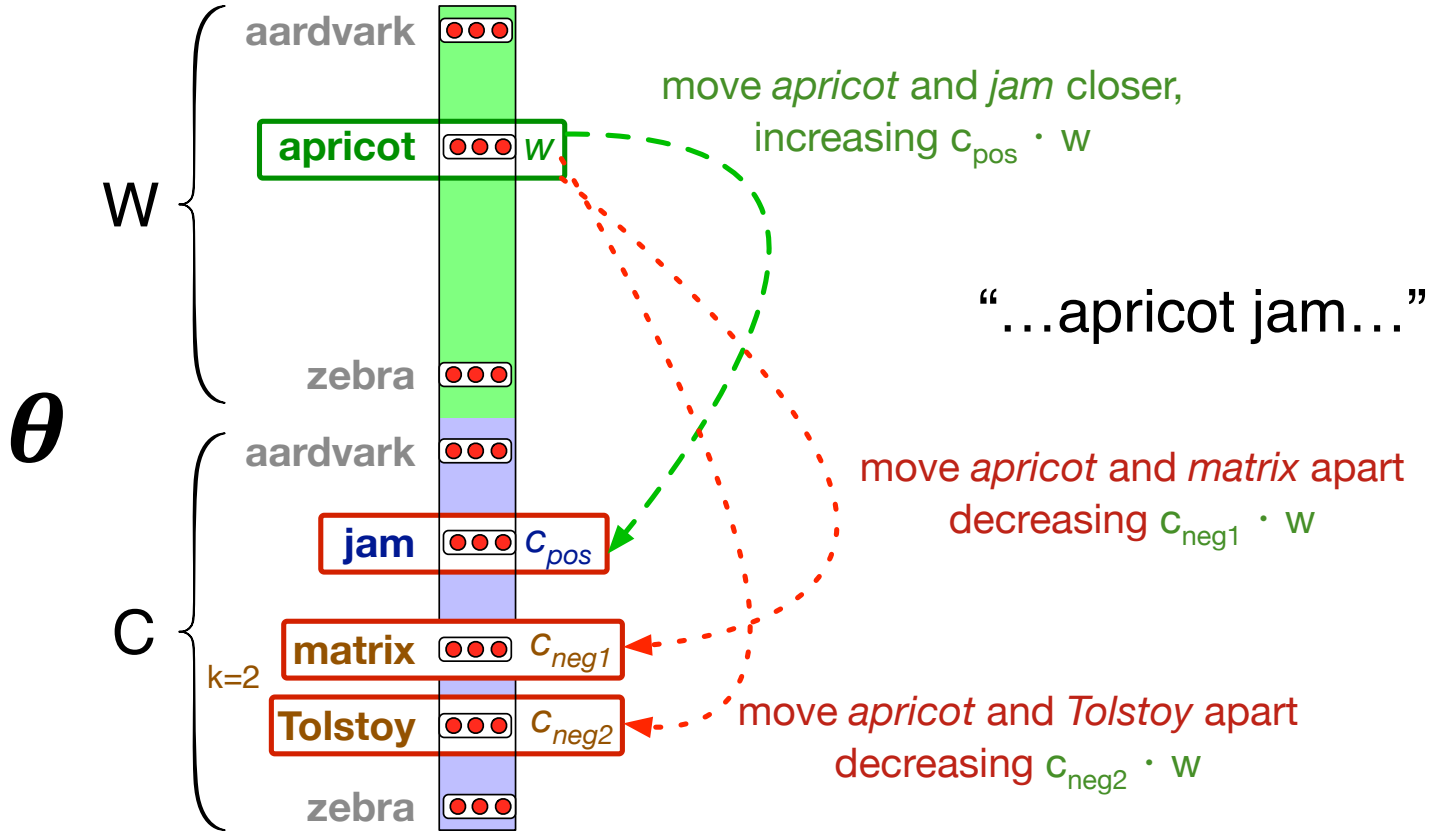

Derivatives of the Loss Function

$$L_{CE} = -\left[\log \sigma(c_{pos} \cdot w) + \sum_{i=1}^{k} \log \sigma(-c_{neg_i} \cdot w)\right]$$

$$\frac{\partial L_{CE}}{\partial c_{pos}} = [\sigma(c_{pos} \cdot w) - 1]w$$

$$\frac{\partial L_{CE}}{\partial c_{neg}} = [\sigma(c_{neg} \cdot w)]w$$

$$\frac{\partial L_{CE}}{\partial w} = [\sigma(c_{pos} \cdot w) - 1]c_{pos} + \sum_{i=1}^{k} [\sigma(c_{\mathrm{neg}_i} \cdot w)]c_{neg_i}$$