30.Keyless Entry System

A: WIRING DIAGRAM

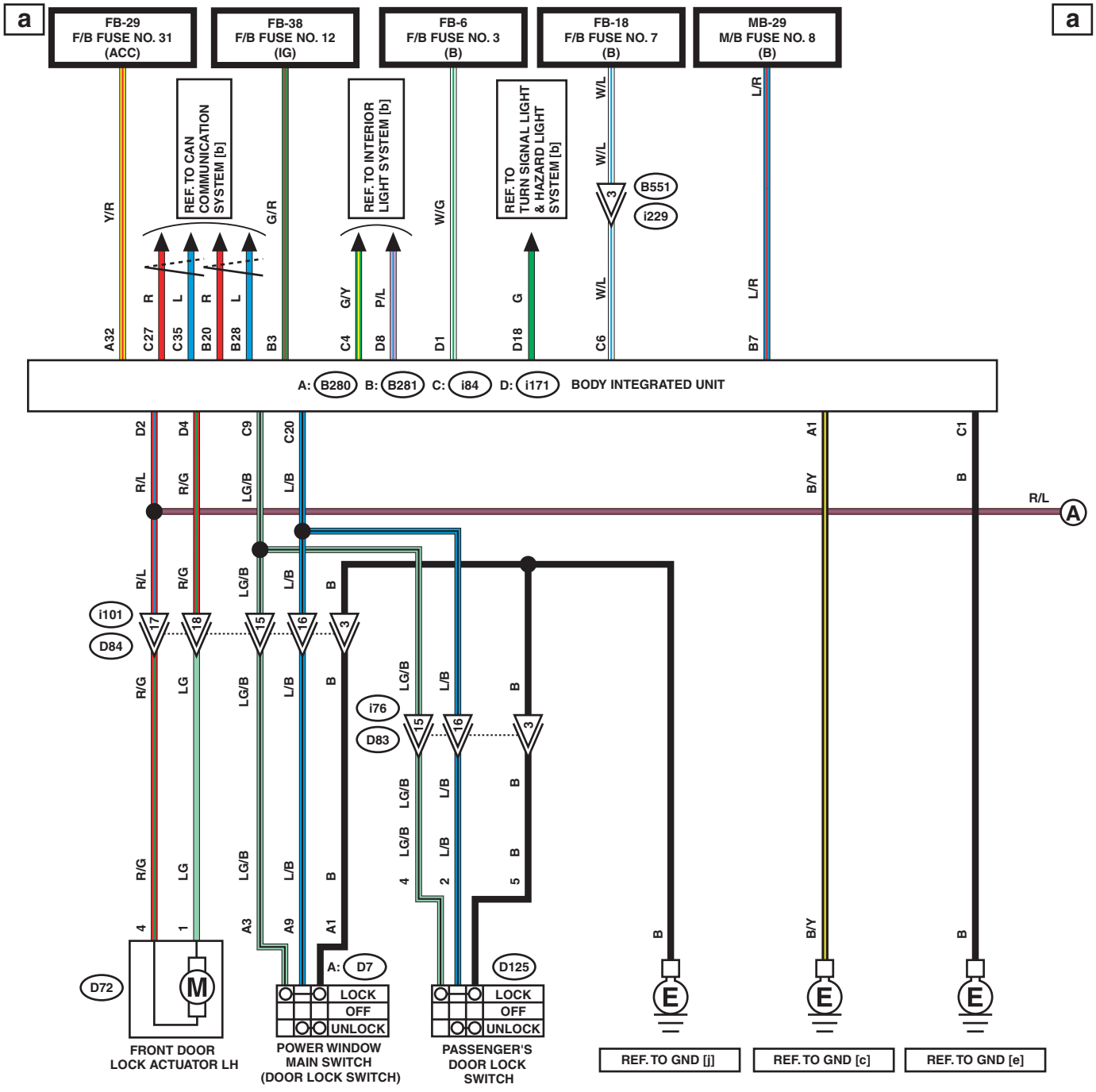

WI-44493

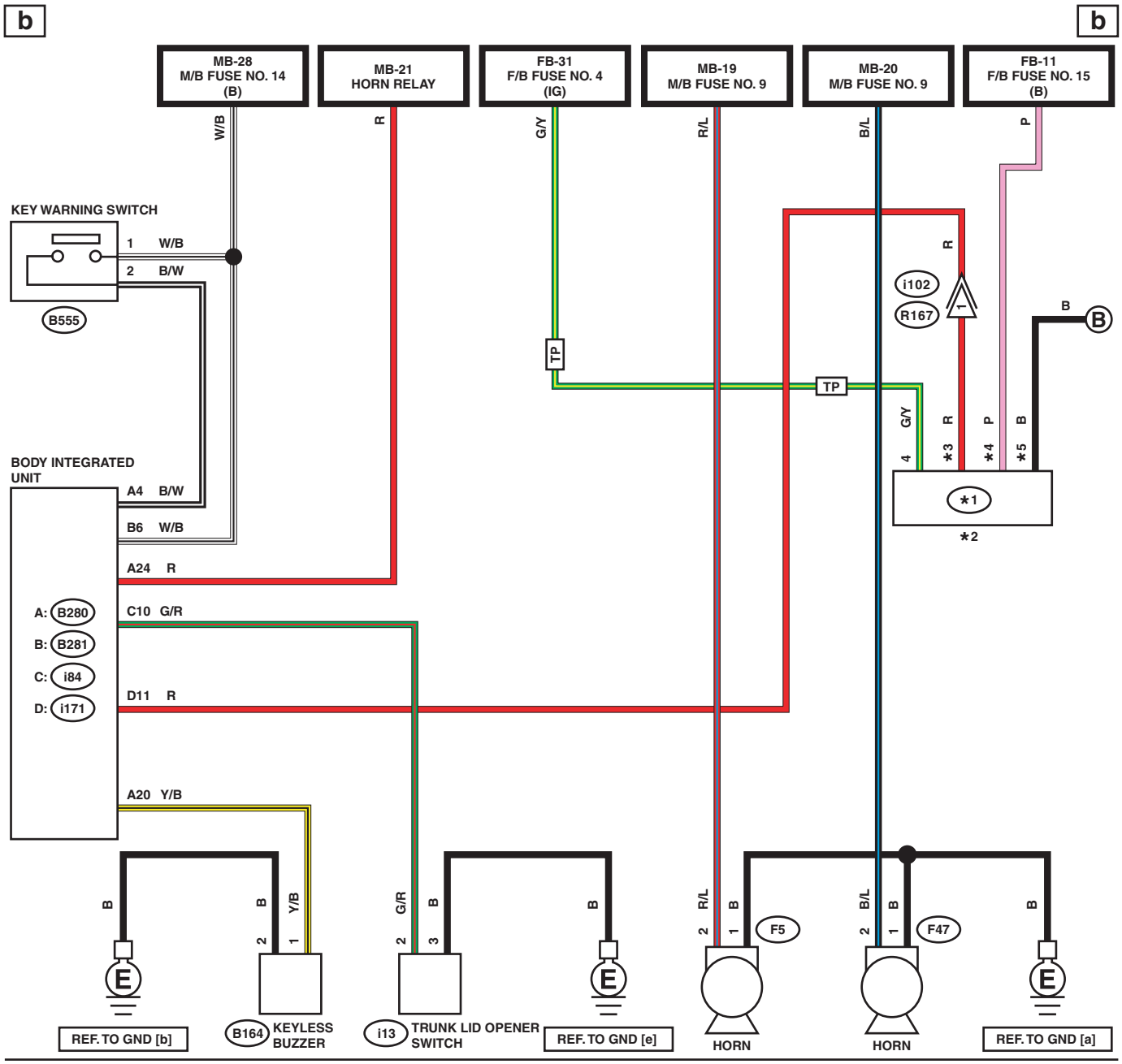

TP : WITH TPMS

*1 : WITHOUT TPMS : R80
WITH TPMS : R221

*2 : WITHOUT TPMS : KEYLESS ENTRY CM
WITH TPMS : TPMS & KEYLESS ENTRY CM

*3 : WITHOUT TPMS : 3
WITH TPMS : 11

*4 : WITHOUT TPMS : 4
WITH TPMS : 6

*5 : WITHOUT TPMS : 7
WITH TPMS : 5

WI-44494

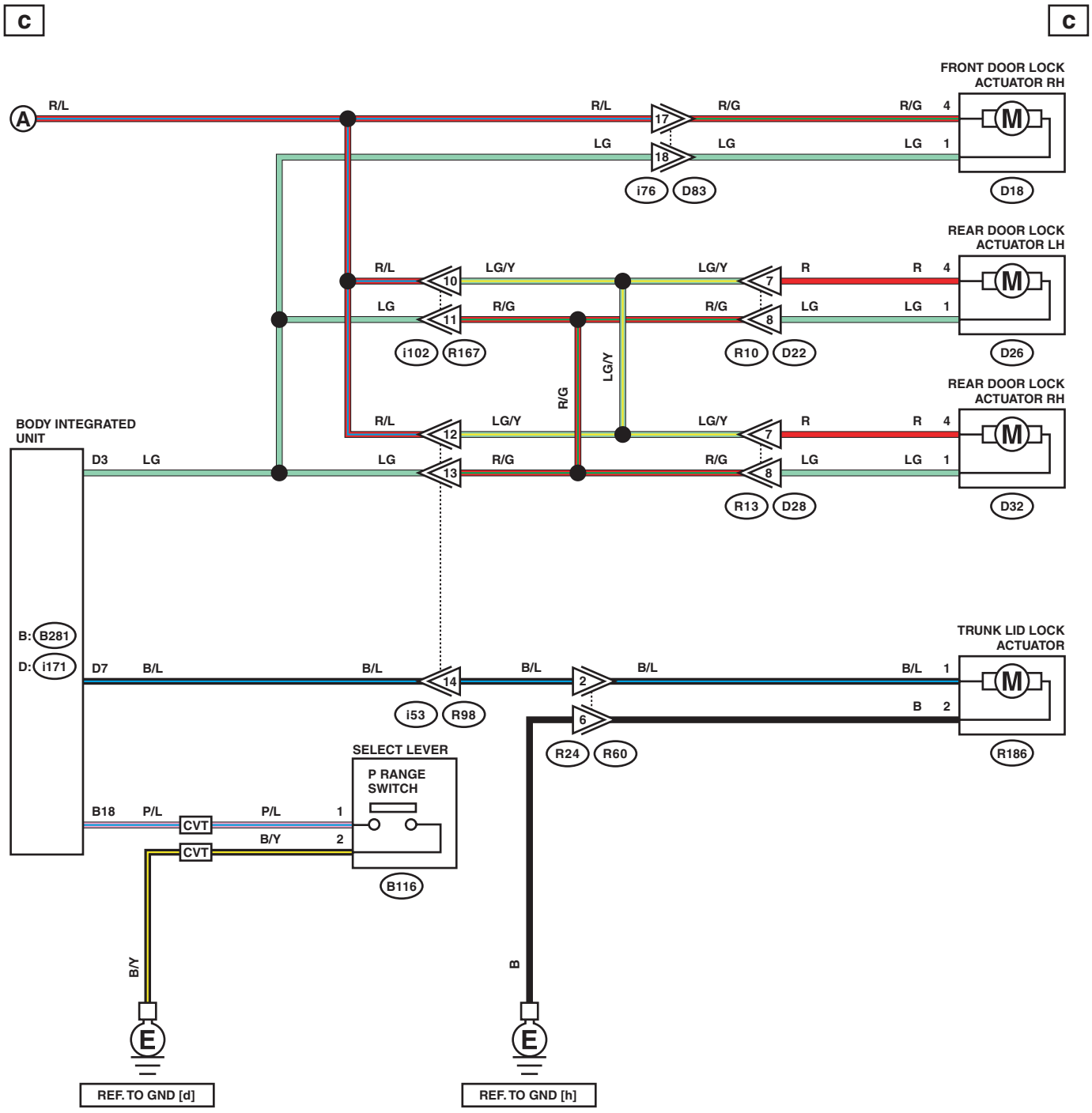
C
C
FRONT DOOR LOCK ACTUATOR RH
A
R/L
R/L
17
R/G
R/G
4
M
LG
18
LG
LG
1
i76
D83
D18
REAR DOOR LOCK ACTUATOR LH
R/L
10
LG/Y
LG/Y
7
R
R
4
M
LG
11
R/G
R/G
8
LG
LG
1
i102
R167
R10
D22
D26
LG/Y
R/G
REAR DOOR LOCK ACTUATOR RH
BODY INTEGRATED UNIT
R/L
12
LG/Y
LG/Y
7
R
R
4
M
D3
LG
LG
13
R/G
R/G
8
LG
LG
1
R13
D28
D32
B: B281
D: i171
TRUNK LID LOCK ACTUATOR
D7
B/L
B/L
14
B/L
2
B/L
B/L
1
M
i53
R98
6
B
2
R24
R60
R186
SELECT LEVER
P RANGE SWITCH
B18
P/L
CVT
P/L
1
CVT
B/Y
2
B116
B/Y
B
E
E
REF. TO GND [d]
REF. TO GND [h]

WI-44495

d

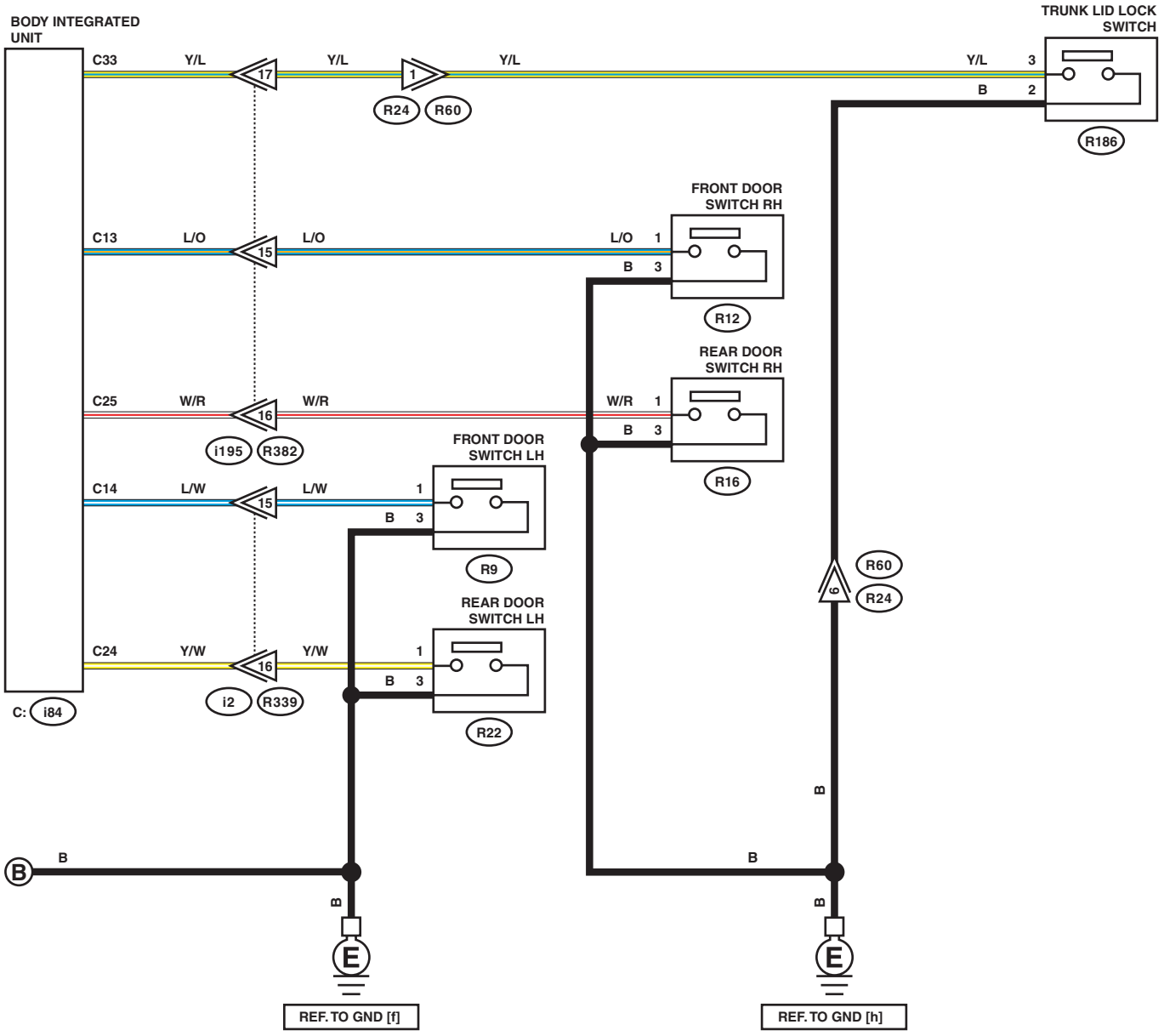
BODY INTEGRATED UNIT
C33
Y/L
17
Y/L
1
Y/L
R24
R60
TRUNK LID LOCK SWITCH
Y/L 3
B 2
R186
FRONT DOOR SWITCH RH
C13
L/O
15
L/O
L/O 1
B 3
R12
REAR DOOR SWITCH RH
C25
W/R
16
W/R
W/R 1
B 3
R16
i195
R382
FRONT DOOR SWITCH LH
C14
L/W
15
L/W
1
B 3
R9
REAR DOOR SWITCH LH
C24
Y/W
16
Y/W
1
B 3
R22
i2
R339
C: i84
R60
6
R24
B
B
B
B
B
E
E
REF. TO GND [f]
REF. TO GND [h]

WI-44496

e

e

LIST OF CONNECTORS

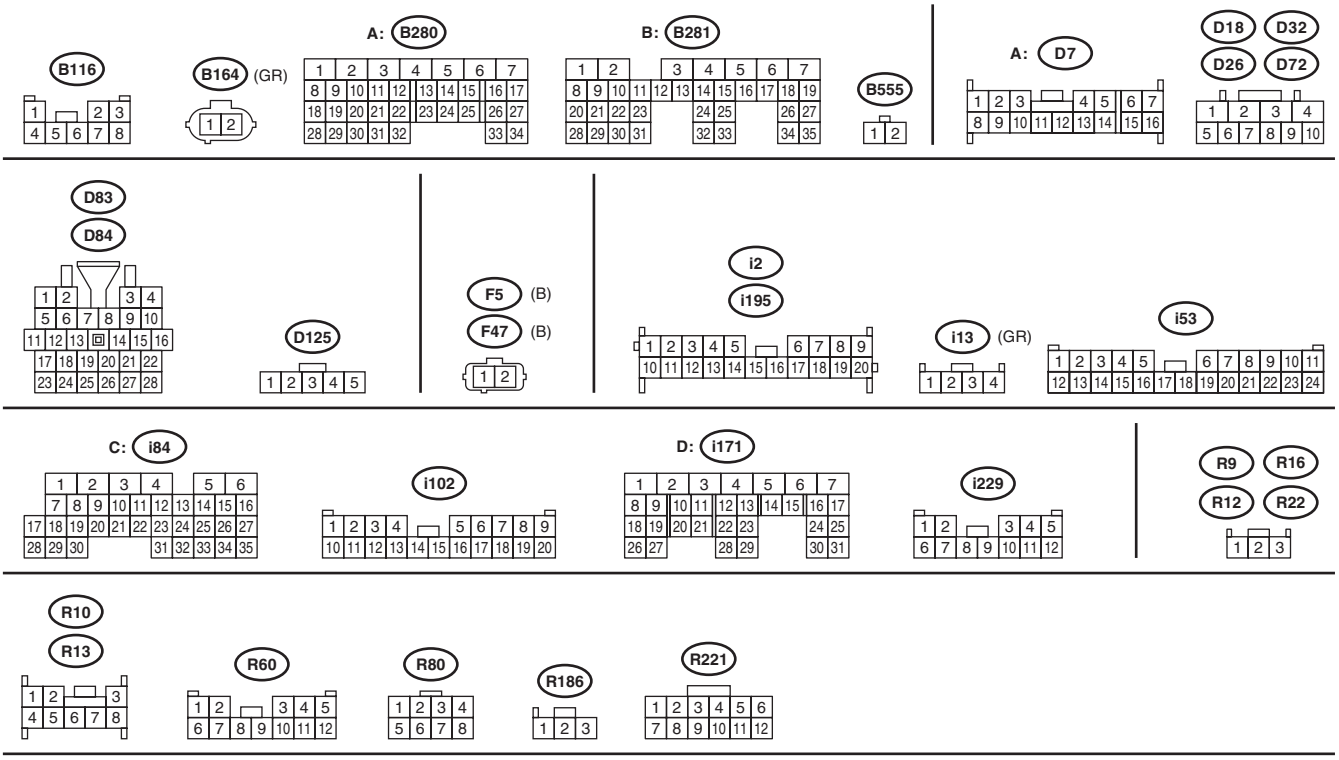

WI-44497