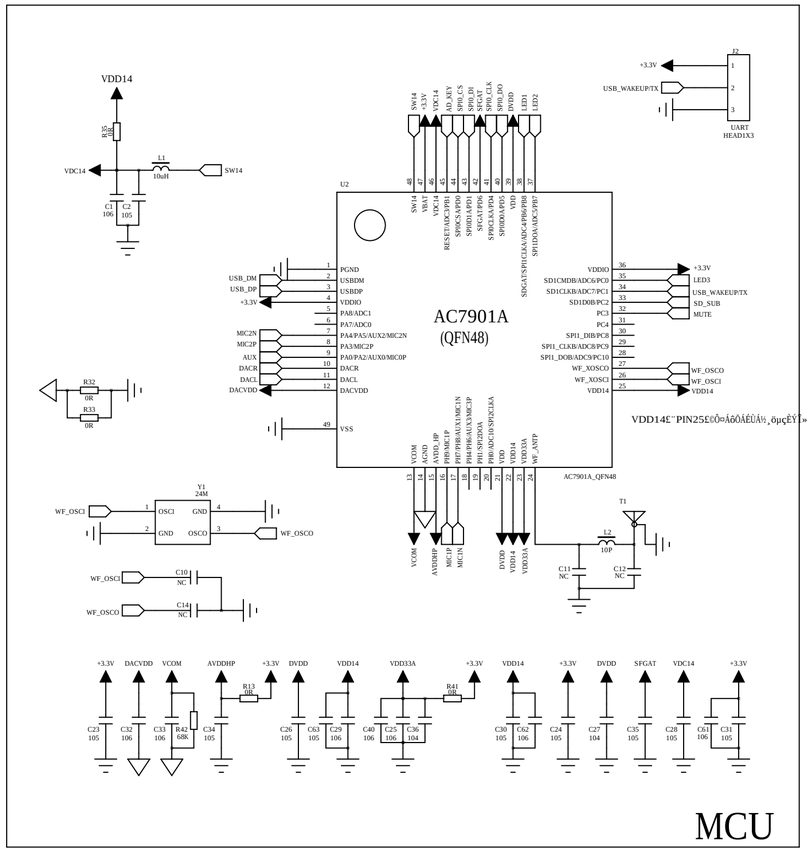

MCU

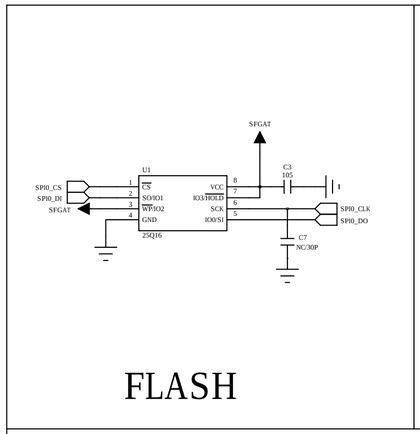

FLASH

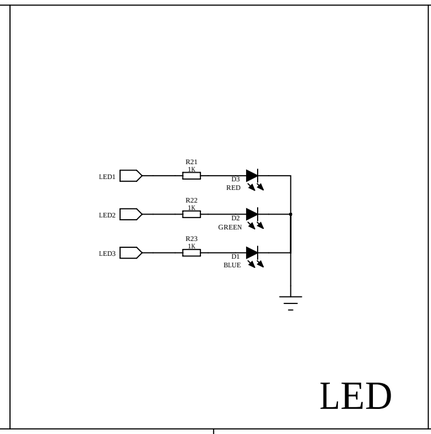

LED

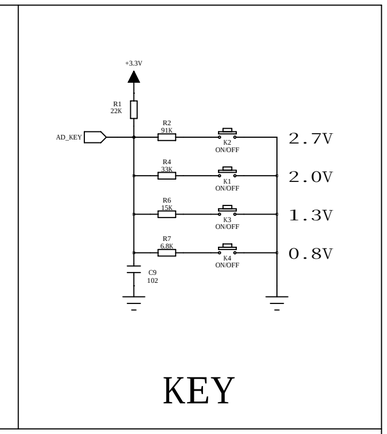

KEY

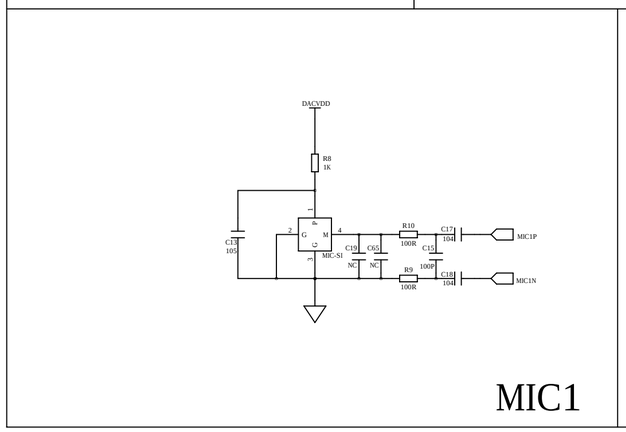

MIC1

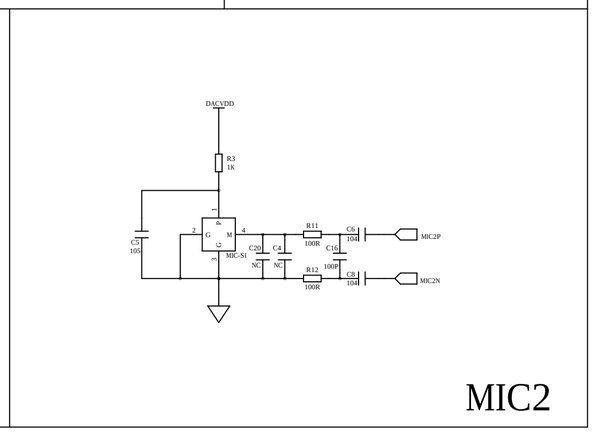

MIC2

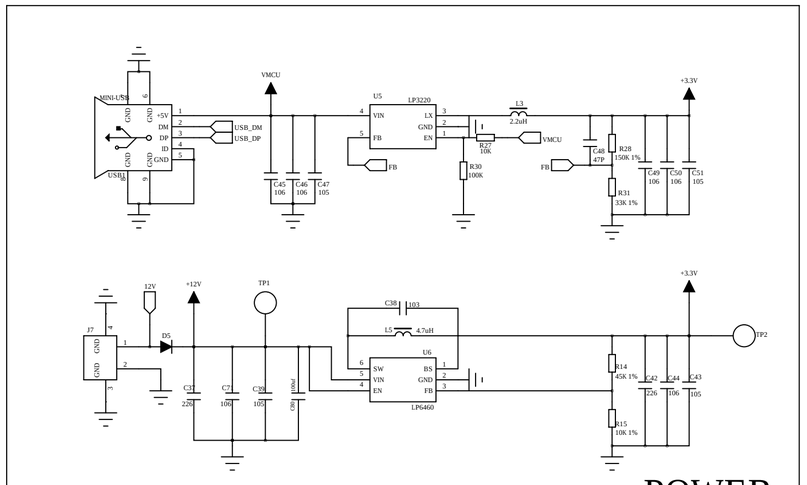

POWER

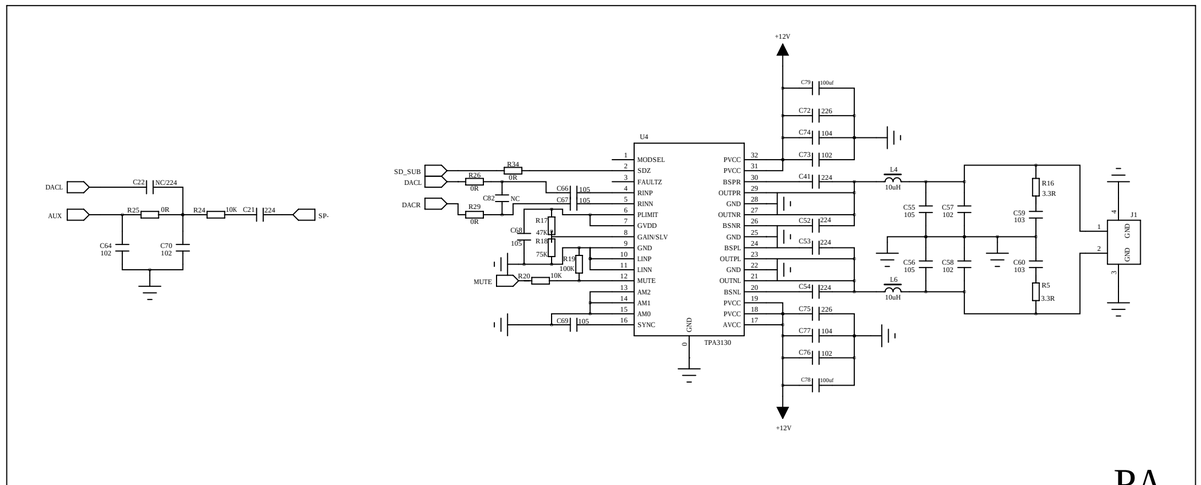

PA