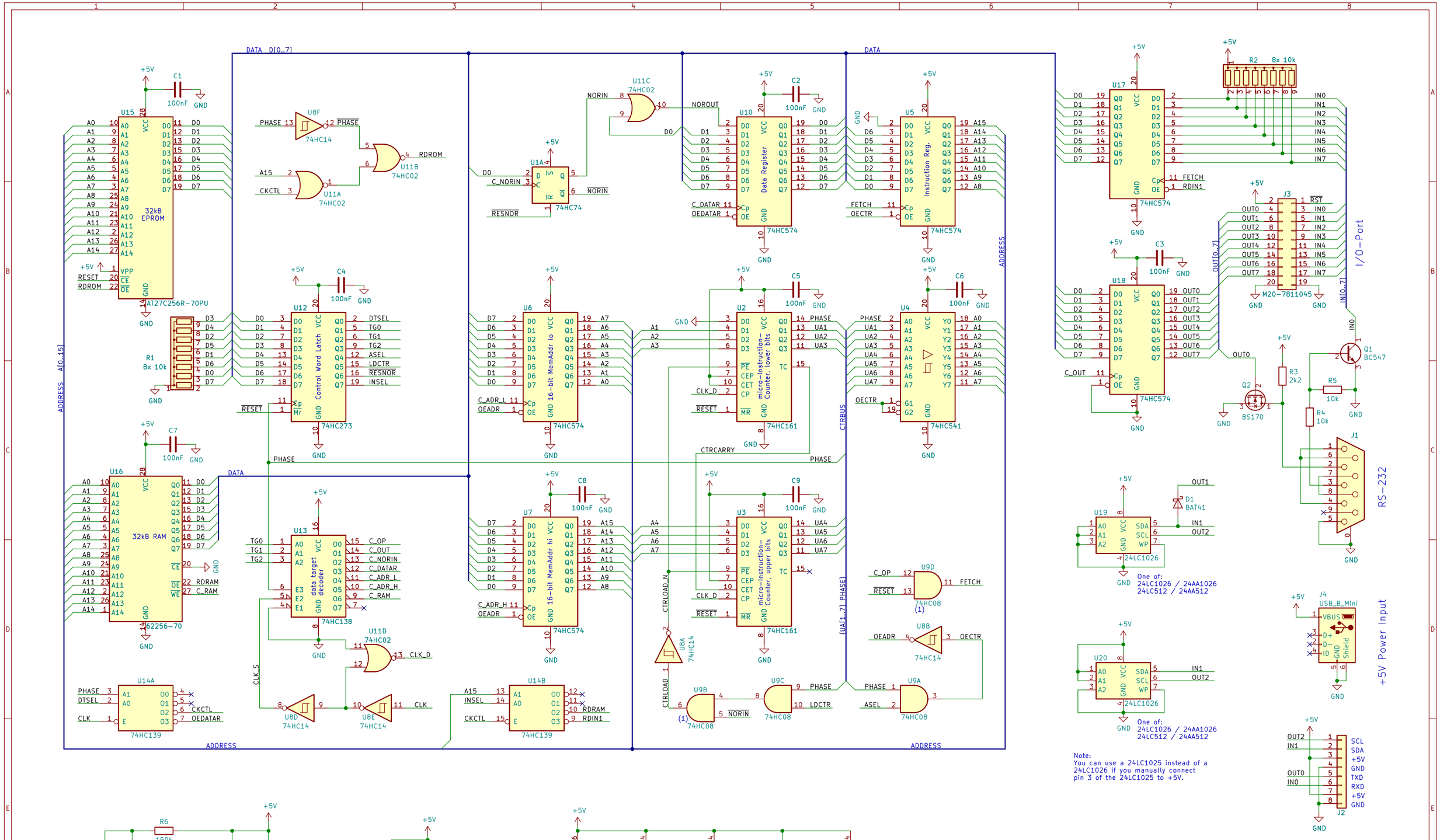

— My4TH —

Forth computer with NOR Gate Logic Unit

This work is licensed under a Creative Commons Attribution-ShareAlike 4.0 International License.

Sheet: /
File: my4th-sbc.kicad_sch

Title: My4TH – The simplest Forth computer by Dennis Kuschel / www.mynor.org

Size: A3	Date: 2022-12-16	**Rev:** 1.2
KiCad E.D.A. kicad (6.0.11)		Id: 1/1