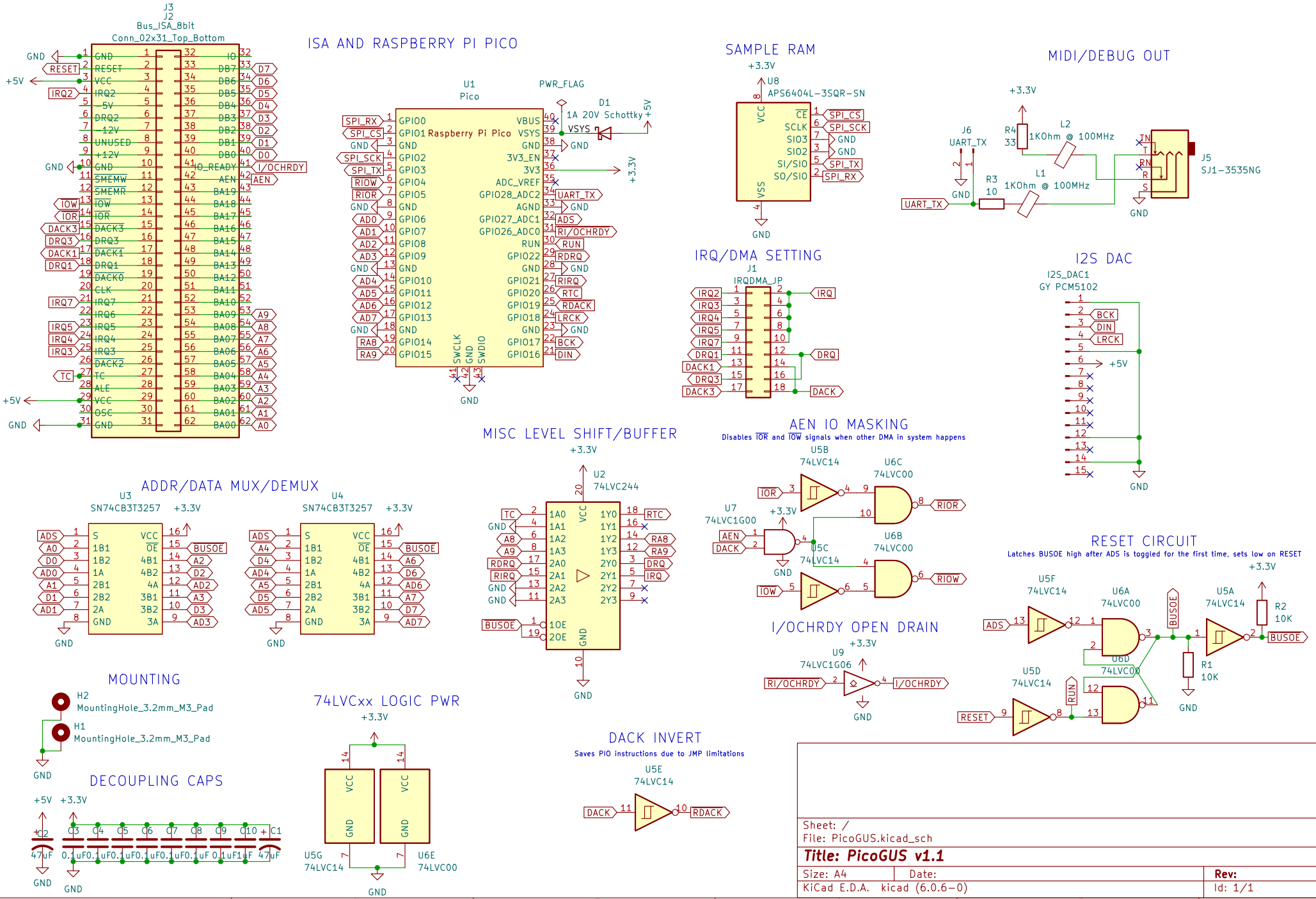
ISA AND RASPBERRY PI PICO
J3
J2
Bus_ISA_8bit
Conn_02x31_Top_Bottom
U1
Pico
Raspberry Pi Pico
PWR_FLAG
D1
1A 20V Schottky
SAMPLE RAM
U8
APS6404L-3SQR-SN
MIDI/DEBUG OUT
J6
UART_TX
R4
33
1KOhm @ 100MHz
L2
L1
R3
10
J5
SJ1-3535NG
IRQ/DMA SETTING
J1
IRQDMA_JP
I2S DAC
I2S_DAC1
GY PCM5102
MISC LEVEL SHIFT/BUFFER
U2
74LVC244
AEN IO MASKING
Disables IOR and IOW signals when other DMA in system happens
U5B
74LVC14
U6C
74LVC00
U7
74LVC1G00
U5C
74LVC14
U6B
74LVC00
ADDR/DATA MUX/DEMUX
U3
SN74CB3T3257
U4
SN74CB3T3257
I/OCHRDY OPEN DRAIN
U9
74LVC1G06
RESET CIRCUIT
Latches BUSOE high after ADS is toggled for the first time, sets low on RESET
U5F
74LVC14
U6A
74LVC00
U5A
74LVC14
R2
10K
R1
10K
U6D
74LVC00
U5D
74LVC14
MOUNTING
H2
MountingHole_3.2mm_M3_Pad
H1
MountingHole_3.2mm_M3_Pad
74LVCxx LOGIC PWR
U5G
74LVC14
U6E
74LVC00
DECOUPLING CAPS
C1
C2
C3
C4
C5
C6
C7
C8
C9
C10
47uF
0.1uF
DACK INVERT
Saves PIO instructions due to JMP limitations
U5E
74LVC14
Sheet: /
File: PicoGUS.kicad_sch
Title: PicoGUS v1.1
Size: A4
Date:
Rev:
KiCad E.D.A. kicad (6.0.6-0)
Id: 1/1