HONDA
XR50R
01
OWNER'S MANUAL

This manual should be considered a permanent part of the motorcycle and should remain with the motorcycle when it is resold.

This publication includes the latest production information available before printing.
Honda Motor Co., Ltd. reserves the right to make changes at any time without notice and without incurring any obligation.

No part of this publication may be reproduced without written permission.

© Honda Motor Co., Ltd. 2000

2001
HONDA XR50R
OWNER'S MANUAL

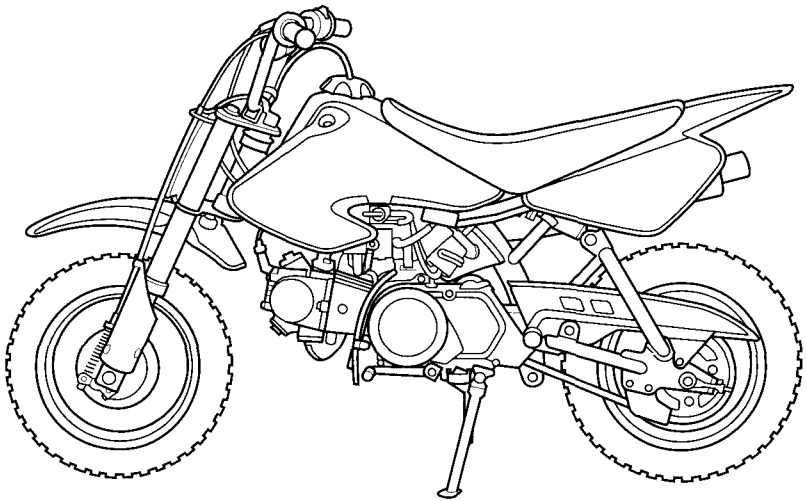

A Few Words About Safety

Your safety, and the safety of others, is very important. And operating this motorcycle safely is an important responsibility.

To help you make informed decisions about safety, we have provided operating procedures and other information on labels and in this manual. This information alerts you to potential hazards that could hurt you or others.

Of course, it is not practical or possible to warn you about all hazards associated with operating or maintaining a motorcycle. You must use your own good judgment.

You will find important safety information in a variety of forms, including:

- **Safety Labels** — on the motorcycle.
- **Safety Messages** — preceded by a safety alert symbol ⚠ and one of three signal words: **DANGER, WARNING,** or **CAUTION.**

These signal words mean:

⚠ DANGER **You WILL be KILLED or SERIOUSLY HURT if you don't follow instructions.**

⚠ WARNING **You CAN be KILLED or SERIOUSLY HURT if you don't follow instructions.**

⚠ CAUTION **You CAN be HURT if you don't follow instructions.**

- **Safety Headings** — such as Important Safety Reminders or Important Safety Precautions.
- **Safety Section** — such as Motorcycle Safety.
- **Instructions** — how to use this motorcycle correctly and safely.

This entire book is filled with important safety information — please read it carefully.

Contents

These pages give an overview of the contents of your owner's manual. The first page of each section lists the topics covered in that section.

Introduction

Motorcycle Safety 1
Important safety information, a special message for parents, precautions about loading, accessories, and modifications, and the location of safety labels.

Operating Controls 13
The location, function, and operation of the throttle, brakes, and other basic controls.

Before Riding 23
The importance of wearing a helmet and other protective gear, plus how to make sure you and your motorcycle are ready to ride.

Basic Operation & Riding 29
How to start and stop the engine, shift gears, and brake. Also, riding precautions.

Servicing Your Honda 41
Why your motorcycle needs regular maintenance, what you need to know before servicing your Honda, a maintenance schedule, and instructions for specific maintenance items.

Contents

Tips **109**
How to transport and store your motorcycle, and how to be an environmentally-responsible rider.

Taking Care of the Unexpected **119**
What to do if you have a flat tire, your engine won't start, etc.

Technical Information **127**
ID numbers, technical specifications, and other technical facts.

Consumer Information **143**
Information on warranties and how to get Honda service manuals.

Table of Contents **152**
Sequential listing of topics in this owner's manual.

Index **156**

Quick Reference
Handy facts about fuel, engine oil, tire sizes, and air pressures.

Introduction

Congratulations on choosing your Honda off-road motorcycle.

When you own a Honda, you're part of a worldwide family of satisfied customers—people who appreciate Honda's reputation for building quality into every product.

Your Honda was designed as a recreational motorcycle for off-road use by one rider only. It's an ideal bike for younger, beginning riders.

Before riding, take time to get acquainted with your motorcycle and how it works. To protect your investment, we urge you to take responsibility for keeping your motorcycle well maintained. Scheduled service is a must, of course. But it's just as important to observe the break-in guidelines, and perform all the pre-ride and other periodic checks detailed in this manual.

We also recommend that you read the owner's manual before you ride. It's full of facts, instructions, safety information, and helpful tips. To make it easy to use, the manual contains a table of contents, a detailed list of topics at the beginning of each section, and an index at the back of the book.

As you read this manual, you will find information that is preceded by a NOTICE symbol. This information is intended to help you avoid damage to your Honda, other property, or the environment.

Read the Warranties Booklet (page 147) thoroughly so you understand the coverages that protect your new Honda and are aware of your rights and responsibilities.

Whenever you ride, tread lightly. By staying on established trails and riding only in approved areas, you help protect the environment and keep off-road riding areas open for the future.

If you have any questions, or if you ever need a special service or repairs, remember that your Honda dealer knows your motorcycle best and is dedicated to your complete satisfaction.

You may also want to visit our website at www.honda.com.

Happy riding!

Motorcycle Safety

This section presents some of the most important information and recommendations to help you ride your motorcycle safely. Please take a few moments to read these pages. This section also includes a special message for parents and location information for the safety labels on your motorcycle.

Important Safety Information 2
Important Message to Parents 5
Loading, Accessories & Modifications 8
  Loading 8
  Accessories & Modifications 10
Safety Labels 12

Important Safety Information

Your motorcycle can provide many years of service and pleasure—if you take responsibility for your own safety and understand the challenges you can meet while riding.

This motorcycle has been designed for younger riders. However, not all youngsters are physically or emotionally ready to ride. Therefore, before parents allow any youngster to ride this motorcycle, we urge them to carefully read the *Important Message to Parents* beginning on page 5 and the *Parents, Youngsters and Off-Highway Motorcycles* booklet that came with the motorcycle (USA only).

There is much that you can do to protect yourself when you ride. You'll find many helpful recommendations throughout this manual. The following are a few that we consider most important.

Always Wear a Helmet
It's a proven fact: helmets significantly reduce the number and severity of head injuries, so don't ride without one. We also recommend that you wear eye protection, sturdy boots, gloves and other protective gear (page 24).

Never Carry a Passenger
Your motorcycle is designed for one person only. There are no handholds, footrests, or seat for a second person—so never carry a passenger. A passenger could interfere with your ability to move around to maintain your balance and control of the motorcycle.

Ride Off-Road Only
Your motorcycle is designed and manufactured for off-road use only. The tires are not made for pavement, and the motorcycle does not have turn signals and other features required for use on public roads. If you need to cross a paved or public road, get off and walk your motorcycle across.

Take Time to Learn and Practice
Developing off-road riding skills is a gradual, step-by-step process. Start by practicing at low speeds in a safe area and slowly build your skills. Personal instruction from an experienced rider can also be valuable.

If you need assistance, ask your dealer about riding groups in your area.

Also be sure to read the *Tips & Practice Guide for the Off-Highway Motorcyclist* booklet that came with your motorcycle (USA only).

Be Alert for Off-Road Hazards
The terrain can present a variety of challenges when you ride off-road. Continually "read" the terrain for unexpected turns, drop-offs, rocks, ruts, and other hazards. Always keep your speed low enough to allow time to see and react to hazards.

Ride within Your Limits
Pushing limits is another major cause of motorcycle accidents. Never ride beyond your personal abilities or faster than conditions warrant. Remember that alcohol, drugs, fatigue, and inattention can significantly reduce your ability to make good judgments and ride safely.

Keep Your Honda in Safe Condition
It's important to keep your motorcycle properly maintained and in safe riding condition. Having a breakdown can be difficult, especially if you are stranded off-road far from your base. To help avoid problems, inspect your motorcycle before every ride and perform all recommended maintenance.

Important Message to Parents

Your child's safety is very important to Honda. That's why we urge you to read this message before you let any young person ride this motorcycle. Off-road riding can be fun. But, as with riding a bicycle, bad judgment can result in injury, and we don't want that to happen! As a parent, you can help prevent accidents by making good decisions about if, when, and how your youngster rides this motorcycle.

Riding Readiness

The first decision you'll need to make is whether your youngster is ready to ride. Riding readiness varies widely from one person to another, and age and size are not the only factors.

PHYSICAL ABILITY is an important consideration. For example, riders must be big enough to hold the motorcycle up, get on, and comfortably sit on the seat with both feet touching the ground. They should also be able to easily reach and work the brakes, throttle, and all other controls.

ATHLETIC ABILITY is necessary for riding a motorcycle. Generally speaking, your youngster should be good at riding a bicycle before getting on a motorcycle. Can your youngster judge speeds and distances while riding a bicycle and react with proper hand and foot actions? Anyone who does not have good coordination, balance, and agility is not ready to ride this motorcycle.

Important Message to Parents

MENTAL AND EMOTIONAL MATURITY are requirements for safe riding. Does your youngster think through problems and come to logical solutions? On a bicycle, does your youngster obey safe riding rules? Be honest! Young people who take unnecessary risks, make bad judgments, and don't obey rules are not ready to ride this motorcycle.

Instruction and Supervision

If you decide that your youngster is ready to safely operate this motorcycle, make sure both of you carefully read and understand the owner's manual before riding. Also be sure that your youngster has a helmet and other appropriate riding equipment and always wears it when operating the vehicle or sitting on it.

GOOD INSTRUCTION is an important part of hands-on training. The teacher can either be you or another responsible adult who has experience with off-road motorcycle riding. (For help in finding a qualified instructor, talk with your Honda dealer.) Even if you're not the main teacher, it's up to you to ensure your youngster's safety. Remember, learning to ride a motorcycle is a gradual, step-by-step process. It takes time, patience, and practice—many hours over a period of weeks or months.

Important Message to Parents

SUPERVISION is another important obligation of parents. Even after youngsters have become skilled off-road riders, they should always ride with adult supervision. It helps to regularly remind young riders of basic safety rules and precautions. And remember, it's your responsibility to see that the motorcycle is properly maintained and kept in safe operating condition.

SAFE AND RESPONSIBLE RIDING must be an on-going commitment—by you and your youngster. When you both put safety first, you can enjoy more peace of mind, and your youngster can enjoy more hours of safe off-road riding.

For your convenience, this XR50R comes with an ignition switch and key. Remove the key when the motorcycle is parked to help prevent unauthorized use.

Loading, Accessories & Modifications

Your Honda was designed as a rider-only motorcycle. It was not designed to carry a passenger or cargo. A passenger or cargo could interfere with your ability to move around to maintain your balance and control of the motorcycle.

In addition, exceeding the weight limits or carrying an unbalanced load can seriously affect your motorcycle's handling, braking, and stability. Adding accessories or making modifications that change this motorcycle's design and performance can also make it unsafe. Also, the weight of any accessories will reduce the maximum load the motorcycle can carry.

More specific information on load limits, accessories, and modifications follows.

Loading

How much weight you put on your motorcycle, and how you load it, are important to your safety. If you decide to carry cargo, you should be aware of the following information.

⚠ WARNING

Overloading or carrying a passenger can cause a crash and you can be seriously hurt or killed.

Follow all load limits and other loading guidelines in this manual.

Load Limits

Following are the load limits for your motorcycle:

Maximum weight capacity
= 88 lbs (40 kg)
Includes the weight of the rider and any accessories.

Loading Guidelines

As discussed on page 8, we recommend that you do not carry any cargo on this motorcycle. However, if you decide to carry cargo, ride at reduced speeds and follow these common-sense guidelines:

- Keep cargo small and light. Make sure it cannot easily be caught on brush or other objects, and that it does not interfere with your ability to shift position to maintain balance and stability.
- Place weight as close to the center of the motorcycle as possible.
- Do not attach large or heavy items (such as a sleeping bag or tent) to the handlebar, fork, or front fender.
- Make sure that all cargo is tied down securely.
- Never exceed the maximum weight limit.
- Check that both tires are inflated properly.

Accessories & Modifications

Modifying your motorcycle or using non-Honda accessories can make your motorcycle unsafe.

Before you consider making any modifications or adding an accessory, be sure to read the following information.

⚠ WARNING

Improper accessories or modifications can cause a crash in which you can be seriously hurt or killed.

Follow all instructions in this owner's manual regarding modifications and accessories.

Accessories

We strongly recommend that you use only genuine Honda accessories that have been specifically designed and tested for your motorcycle. Because Honda cannot test all other accessories, you must be personally responsible for proper selection, installation, and use of non-Honda accessories. Check with your dealer for assistance and always follow this guideline:

- Make sure the accessory does not reduce ground clearance and lean angle, limit suspension travel or steering travel, alter your riding position, or interfere with operating any controls.

Modifications

We strongly advise you not to remove any original equipment or modify your motorcycle in any way that would change its design or operation. Such changes could seriously impair your motorcycle's handling, stability, and braking, making it unsafe to ride.

We also advise you not to make any modifications or remove any equipment (such as the USDA qualified spark arrester or emission control system components) that would make the motorcycle illegal in your area.

Safety Labels

This page shows the locations of safety labels on your motorcycle. Some labels warn you of potential hazards that could cause serious injury. Others provide important safety information. Read these labels carefully and don't remove them.

If a label comes off or becomes hard to read, contact your Honda dealer for a replacement.

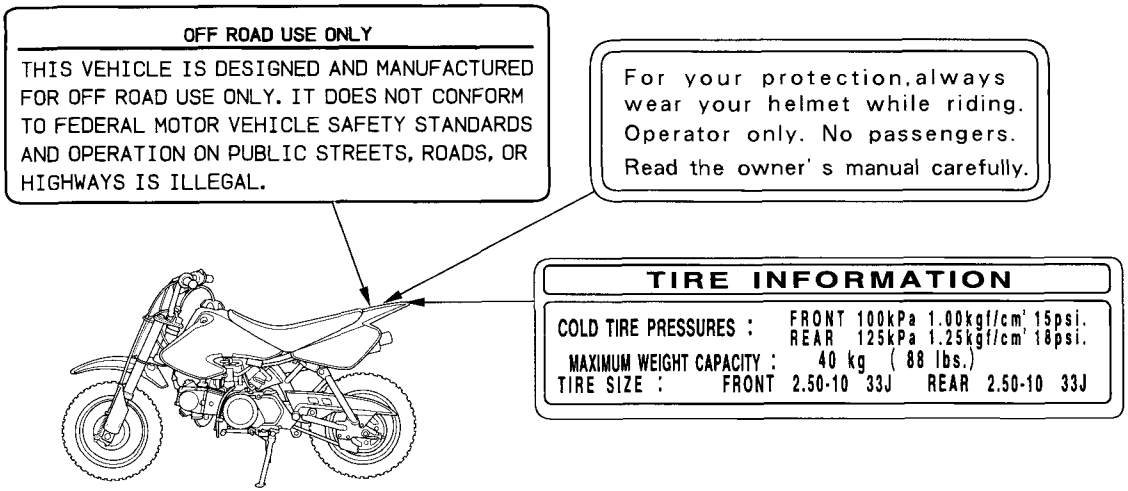

Operating Controls

When you ride off-road, you need to operate the throttle, brakes, and other controls without stopping to look at them. Read this section carefully before you ride. It describes the location, function, and operation of all the basic controls on your motorcycle.

Component Locations 14
Fuel Valve 17
Choke Lever 18
Ignition Switch 19
Engine Stop Switch 20
Front Brake Lever 20
Throttle 20
Shift Lever 21
Rear Brake Pedal 21
Kickstarter 21
Side Stand 21

Component Locations

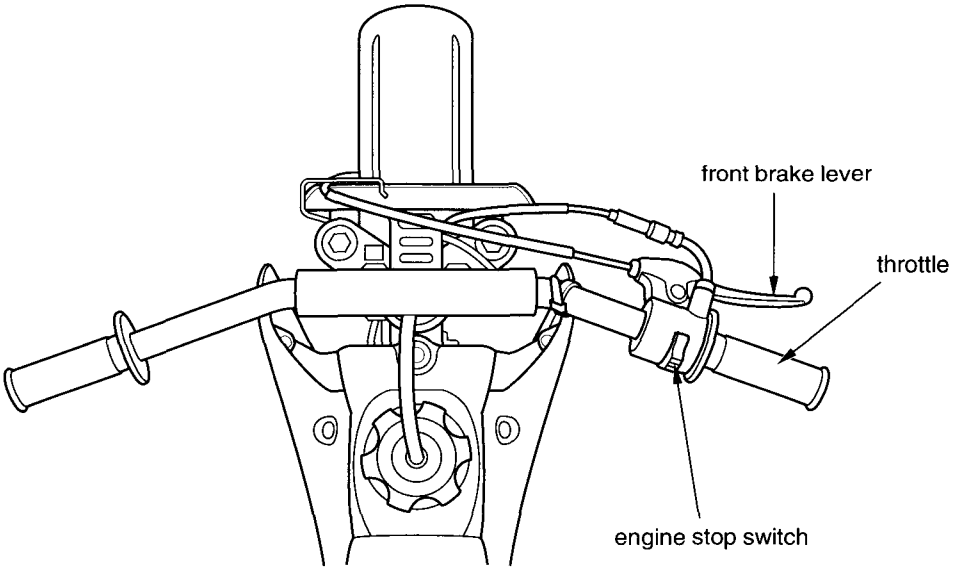

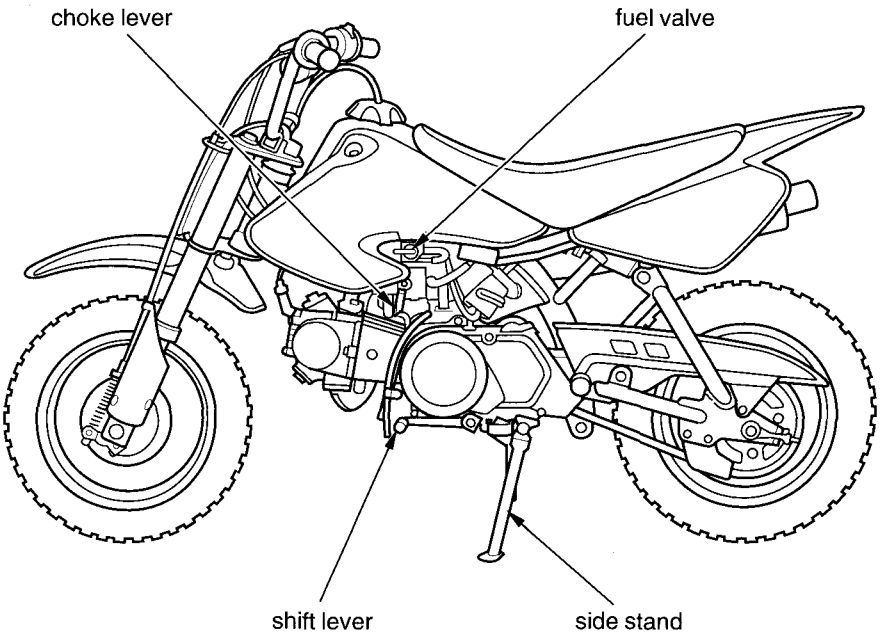
choke lever
fuel valve
shift lever
side stand

Component Locations

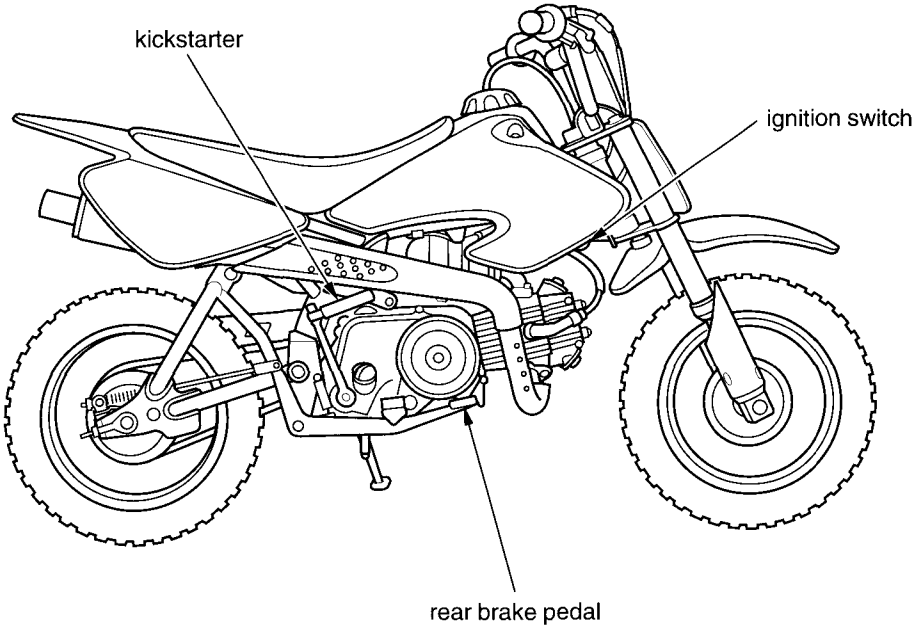

Fuel Valve

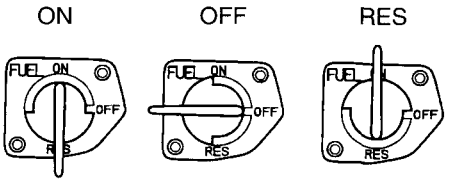

The three-way fuel valve is used to control the flow of fuel from the fuel tank to the carburetor.

ON
Turning the fuel valve ON before attempting to start the engine allows fuel to flow from the fuel tank to the carburetor.

OFF
Turning the fuel valve OFF after stopping the engine prevents the flow of fuel from the fuel tank to the carburetor.

RES
Turning the fuel valve to RES allows fuel to flow from the reserve fuel supply to the carburetor.

The reserve fuel supply is:
0.24 US gal (0.9 ℓ , 0.20 Imp gal)

The tank should be refilled as soon as possible after switching to reserve, and the fuel valve should be returned to the ON position after refueling to avoid running out of fuel with no reserve.

Choke Lever

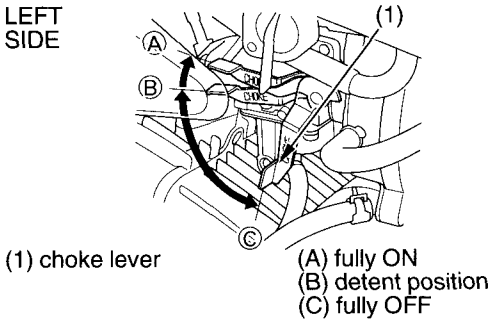

The choke lever is used for starting the engine (page 35). The choke increases the percentage of fuel in the fuel/air mixture delivered to the engine.

ON
Used to start a cold engine with air temperature below 35°C (95°F).

DETENT
Used to warm a cold engine immediately after starting with air temperature below 35°C (95°F).

OFF
Used for normal operation, for restarting a warm engine, or starting a cold engine with air temperature above 35°C (95°F).

Ignition Switch

The ignition switch is used to prevent unauthorized use of the motorcycle.

Before riding, insert the key and turn it to the right for the ON position.

Key Position	Function	Key Removal
OFF	The engine cannot be operated.	The key can be removed.
ON	With the engine stop switch at RUN and the transmission in neutral, the engine can be started.	The key cannot be removed.

After parking the motorcycle, remove the key.

RIGHT SIDE (under fuel tank)

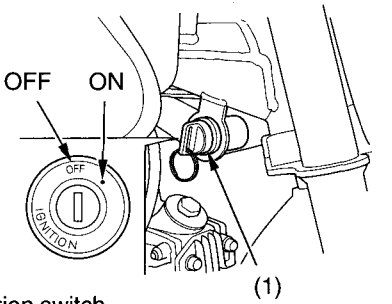

(1) ignition switch

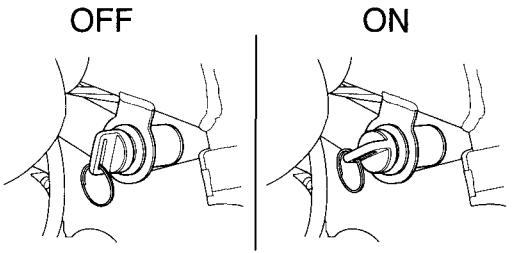

Engine Stop Switch

The engine stop switch is used to turn the engine off during normal riding situations. To operate, turn the switch to either OFF position. The switch must be in the RUN position to start the engine.

Front Brake Lever

The front brake lever is used to slow or stop your motorcycle. To operate, pull the lever. For information on braking techniques, see page 37.

Throttle

The throttle controls engine rpm (speed). To increase engine rpm, rotate the grip toward you. To reduce engine rpm, rotate the grip away from you. The throttle will automatically return to the closed position (engine idle) when you remove your hand.

Shift Lever

The shift lever is used to select the next higher or lower gear in the transmission. To operate, raise the shift lever (after closing the throttle) to engage the next higher gear or depress the shift lever to engage the next lower gear. See *Shifting Gears,* page 35.

Rear Brake Pedal

The rear brake pedal is used to slow or stop your motorcycle. To operate, depress the pedal. For information on braking techniques, see page 37.

Kickstarter

The kickstarter is used to start the engine. To operate, swing the kickstarter out from its stored position and depress it through its entire stroke. See *Starting Procedure,* page 32.

Side Stand

The side stand is used to support your motorcycle while parked (page 38). To operate, use your foot to lower the stand. Before riding, raise the stand.

Before Riding

Before each ride, you need to make sure you and your Honda are both ready to ride. To help get you prepared, this section discusses how to evaluate your riding readiness, and how to perform the recommended pre-ride inspection of your Honda. If you're a parent, be sure you also read the *Important Message to Parents* on page 5.

Are You Ready to Ride ? 24
Protective Apparel 24
Is Your Motorcycle Ready to Ride ? 26
Pre-ride Inspection 27

Are You Ready to Ride?

Before you ride your motorcycle for the first time, we strongly recommend that you:

- read this owner's manual
- make sure you understand all the safety messages
- know how to operate all the controls

Before each ride, we also suggest that you make sure you:

- are in good physical and mental condition
- are free of alcohol and drugs
- are wearing a proper helmet, eye protection, and protective clothing

Protective Apparel

For your safety, we strongly recommend that you always wear an approved motorcycle helmet, eye protection, boots, gloves, long pants, and a long-sleeved jersey, shirt, or jacket whenever you ride. Although complete protection is not possible, wearing the proper gear can reduce the chance of injury when you ride. Following are suggestions to help you choose the proper gear.

⚠ WARNING

Not wearing a helmet increases the chance of serious injury or death in a crash.

Be sure you always wear a helmet, eye protection and other protective apparel when you ride.

Helmets and Eye Protection

Your helmet is your most important piece of riding gear because it offers the best protection against head injuries. A helmet should fit your head comfortably and have a chin strap that can be tightened securely.

An open-face helmet offers some protection, but a full-face helmet offers more. Regardless of the style, look for a DOT (Department of Transportation) sticker in any helmet you buy (USA only). Always wear a face shield or goggles to protect your eyes and help your vision.

Additional Riding Gear

In addition to a helmet and eye protection, we also recommend:

- Sturdy off-road motorcycle boots to help protect your feet, ankles, and lower legs.
- Off-road motorcycle gloves to help protect your hands.
- Riding pants with knee and hip pads, a riding jersey with padded elbows, and a chest/shoulder protector.

Is Your Motorcycle Ready to Ride?

Before each ride, it's important to inspect your motorcycle and make sure any problem you find is corrected. A pre-ride inspection is a must because off-road riding can be tough on a motorcycle and you don't want to have a breakdown far from help.

⚠ WARNING

Improperly maintaining this motorcycle or failing to correct a problem before riding can cause a crash in which you can be seriously hurt or killed.

Always perform a pre-ride inspection before every ride and correct any problems.

Note to Parents:
If a youngster will be performing any of the following pre-ride inspection procedures, it's your responsibility to provide careful supervision and make sure they are performed safely.

Pre-ride Inspection

Check the following items before you get on the motorcycle:

Tires	Use a gauge to check the air pressure. Adjust if needed. Also look for signs of damage or excessive wear (page 94).
Spokes & Rims	Make sure the spokes are tight. Also check the rims for damage (page 89).
Leaks	Look under the motorcycle for signs of leaking fluids (fuel, engine oil).
Engine Oil	Check the level and add oil if needed (page 61).
Fuel	Check the level and add fuel (page 57) if needed. Also make sure the fuel fill cap is securely fastened.
Drive Chain	Check the condition and slack. Adjust and lubricate if needed. Also check the chain slider for wear and replace if needed (page 100).
Cables	Check the cable housings for wear. Check the fittings for looseness. Replace or tighten as needed.
Nuts & Bolts	Use a wrench to make sure all accessible nuts, bolts, and fasteners are tight.
Spark Plug & Cap	Check for looseness (page 77).

Is Your Motorcycle Ready to Ride?

Check these items after you get on the motorcycle:

Throttle — Check the freeplay and adjust if needed. Rotate the throttle to make sure it moves smoothly without sticking, and snaps shut automatically when it is released, in all steering positions (page 68).

Brakes — Squeeze the front brake lever and step on the rear brake pedal to check that the controls operate normally (page 84). Adjust freeplay, if necessary. (pages 84, 86).

Remember, be sure to take care of any problem you find or have your Honda dealer correct it before you ride.

Basic Operation & Riding

This section gives basic information on how to begin riding your motorcycle. It includes how to start and stop your engine, how to use the throttle and brakes, and what to do when you're through riding.

For more advanced information—how to make turns, ride on hills, etc., see the *Tips & Practice Guide for the Off-Highway Motorcyclist* booklet that came with your Honda (USA only).

To protect your new engine and enjoy optimum performance and service life, refer to Break-in Guidelines (page 135).

Safe Riding Precautions.....30
Starting & Stopping the Engine.....32
Preparation.....32
Starting Procedure.....32
Flooded Engine.....34
How to Stop the Engine.....34
Shifting Gears.....35
Braking.....37
Parking.....38
Post-ride Inspection.....39

Safe Riding Precautions

Before riding your motorcycle for the first time, please review the *Important Safety Information* beginning on page 2 and the previous section, titled *Before Riding*.

Even if you have ridden other motorcycles, take time to become familiar with how this motorcycle works and handles. Practice in a safe area until you build up your skills and get accustomed to your motorcycle's size and weight.

For your safety, avoid starting or operating the engine in an enclosed area such as a garage. Your motorcycle's exhaust contains poisonous carbon monoxide gas which can collect rapidly in an enclosed area and cause illness or death.

Your motorcycle is not equipped with lights. Do not ride at night.

Speed Restrictor for New Riders

The motorcycle is equipped with a throttle limiter to restrict top speed. The throttle limiter screw in the lower throttle housing can be adjusted to limit throttle grip movement (page 70).

Use the throttle limiter with the transmission set in first gear until your youngster becomes familiar with operating the motorcycle.

Before each ride, check the throttle limiter screw measurement and the restriction of throttle grip movement.

Starting the Engine

Always follow the proper starting procedure described below.

Preparation

Before starting, insert the key and turn the ignition switch ON.
Make sure that the transmission is in neutral and the engine stop switch is at RUN. Turn the fuel valve ON.

Starting Procedure

To restart a warm engine, follow the procedure for *High Air Temperature.*

Normal Air Temperature
10° – 35°C (50° – 95°F)

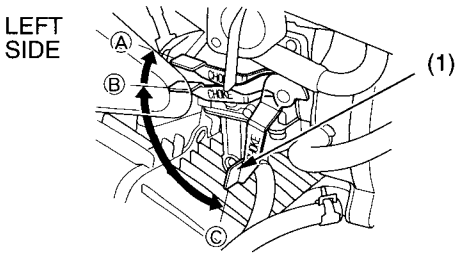

(1) choke lever

(A) fully ON
(B) detent position
(C) fully OFF

1. Pull the choke lever (1) up all the way to fully ON (A).

2. With the throttle slightly open, operate the kickstarter. Kick from the top of the stroke through to the bottom with a rapid, continuous motion.

NOTICE

Allowing the kickstarter to snap back freely against the pedal stop can damage the engine case.

3. Immediately after the engine starts, push the choke lever down to the detent position (B).
4. About a quarter-minute after the engine starts, push the choke lever down all the way to fully OFF (C).
5. If idling is unstable, open the throttle slightly.

High Air Temperature
35°C (95°F) or above

1. Do not use the choke.
2. Start the engine following step 2 under *Normal Air Temperature.*

Low Air Temperature
10°C (50°F) or below

1. Follow steps 1 – 2 under *Normal Air Temperature.*
2. Warm up the engine by opening and closing the throttle slightly.
3. Continue warming up the engine until it idles smoothly and responds to the throttle with the choke lever (1) OFF (C).

NOTICE

Extended use of the choke may impair piston and cylinder wall lubrication and damage the engine.

Flooded Engine

If the engine fails to start after repeated attempts, it may be flooded with excess fuel. To clear a flooded engine:

1. Turn the engine stop switch OFF.
2. Push the choke lever down all the way to OFF.
3. Open the throttle fully.
4. Crank the engine several times with the kickstarter.
5. Turn the engine stop switch to RUN.
6. Follow the *High Air Temperature* starting procedure (page 33).

How to Stop the Engine

To stop the engine, shift into neutral, turn the engine stop switch to either OFF.

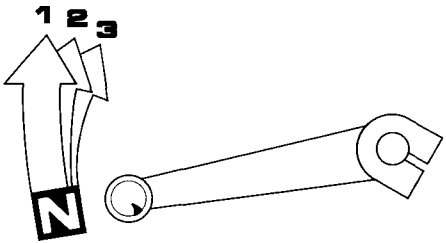

Your motorcycle has three forward gears.

To start riding, after the engine has been warmed and the side stand raised:

1. Close the throttle and pull the front brake lever in.
2. Raise the shift lever from neutral up to first gear.
3. Release the front brake. Gradually open the throttle.
4. When you attain a moderate speed, close the throttle and raise the shift lever. After shifting, apply the throttle.
5. To continue shifting up to each higher gear, repeat step 4 .
6. To shift down to a lower gear, close the throttle and depress the shift lever. After shifting, apply the throttle.

Remember to close the throttle before shifting.

NOTICE

Improper shifting may damage the engine, transmission, and drive train.

Shifting Gears

Learning when to shift gears comes with experience. Upshift to a higher gear or reduce throttle before engine rpm (speed) gets too high. Downshift to a lower gear before you feel the engine laboring (lugging) at low rpm.

Downshifting can help slow your motorcycle, especially on downhills. However, downshifting when engine rpm is too high can cause engine damage.

To prevent transmission damage, do not coast or tow the motorcycle for long distances with the engine off.

Braking

To slow or stop, apply the front brake and rear brake pedal smoothly, while downshifting to match your speed. Gradually increase braking as you feel the brakes slowing your speed. For support, put your left foot down first, then your right foot when you are through using the rear brake.

For maximum braking, close the throttle and firmly apply the brake lever and pedal controls.

Applying the brakes too hard may cause the wheels to lock and slide, reducing control of your motorcycle. If this happens, release the brake controls, steer straight ahead until you regain control, then reapply the brakes more gently.

Generally, reduce your speed or complete braking before beginning a turn. Avoid braking or closing the throttle quickly while turning. Either action may cause one or both wheels to slip. Any wheel slip will reduce your control of your motorcycle.

When riding in wet or raining conditions, or on loose surfaces, the ability to maneuver and stop will be reduced. All of your actions should be smooth under these conditions. Rapid acceleration, braking, or turning may cause loss of control. For your safety, exercise extreme caution when braking, accelerating, or turning.

When descending a long, steep grade, use engine compression braking by downshifting, with intermittent use of both brakes.

Parking

Lower the side stand to support your motorcycle. Turn the ignition switch OFF and remove the key. If you're through riding for the day, also turn the fuel valve OFF. Always choose a level place to park.

Post-ride Inspection

When you return home after riding, thoroughly clean your motorcycle and remove any dirt, mud, brush, rocks or other objects you may have picked up along the way.

After cleaning, carefully inspect your motorcycle for leaks or damage.

Be sure to lubricate the drive chain (page 103) to prevent rusting.

Servicing Your Honda

Keeping your motorcycle well maintained is absolutely essential to your safety. It's also a good way to protect your investment, get maximum performance, avoid breakdowns, and have more fun.

To help keep your motorcycle in good shape, this section includes a Maintenance Schedule for required servicing and step-by-step instructions for specific maintenance tasks. You'll also find important safety precautions, information on oils, and tips for keeping your Honda looking good.

For information about the exhaust emission and noise emission requirements of the California Air Resources Board (CARB), see page 137 .

Before You Service Your Honda
The Importance of Maintenance.....43
Maintenance Safety.....45
Important Safety Precautions.....45
Maintenance Schedule 47
Maintenance Record 51

Service Preparations
Component Locations 52
Tools.....54
Seat Removal 55
Front Fork Protector Removal 56

Servicing Your Honda

Service Procedures

Fluids & Filters
Fuel....57
Engine Oil....60
Air Cleaner....65

Engine
Throttle....68
Clutch System....71
Valve Clearance....73
Engine Idle Speed....76
Spark Plug....77
Spark Arrester....79

Chassis
Suspension....81
Brakes....84
Wheels....89
Tires & Tubes....94
Side Stand....98
Drive Chain....99

Appearance Care....106

The Importance of Maintenance

A well-maintained motorcycle is essential for safe, economical, and trouble-free riding. It will also help reduce air pollution. Careful pre-ride inspections and good maintenance are especially important because your motorcycle is designed to be ridden over rough off-road terrain.

To help you properly care for your motorcycle, this section of the manual provides a Maintenance Schedule. The service intervals in this schedule are based on average riding conditions.

More frequent service is needed if you subject your motorcycle to severe use (such as competition) or ride in unusually wet or dusty areas.

Frequent servicing of the air cleaner is especially important to help you avoid a possible costly engine repair.

If your motorcycle overturns or is involved in a crash, be sure your Honda dealer inspects all major parts, even if you are able to make some repairs.

⚠ WARNING

Improperly maintaining this motorcycle or failing to correct a problem before you ride can cause a crash in which you can be seriously hurt or killed.

Always follow the inspection and maintenance recommendations and schedules in this owner's manual.

The Importance of Maintenance

Remember, proper maintenance is the owner's responsibility. Be sure to inspect your motorcycle before each ride and follow the Maintenance Schedule in this section.

Note to Parents:
As a parent, it's up to you to make sure that this motorcycle is properly maintained and kept in safe operating condition. For youngsters, learning how to take care of a motorcycle and perform basic maintenance can be an important part of their riding experience. However, if you allow a youngster to perform or assist in any maintenance task, such as filling the tank with gasoline, you should provide close supervision to make sure that it is performed safely.

The maintenance section includes instructions on how to perform some important maintenance tasks. Some of the most important safety precautions follow. However, we cannot warn you of every conceivable hazard that can arise in performing maintenance. Only you can decide whether or not you should perform a given task.

⚠WARNING

Failure to properly follow maintenance instructions and precautions can cause you to be seriously hurt or killed.

Always follow the procedures and precautions in this owner's manual.

Important Safety Precautions

- Make sure the engine is off before you begin any maintenance or repairs.
  This will help eliminate several potential hazards:

  Carbon monoxide poisoning from engine exhaust. Be sure there is adequate ventilation whenever you operate the engine.

  Burns from hot motorcycle parts. Let the engine and exhaust system cool before touching.

  Injury from moving parts. Do not run the engine unless instructed to do so.

(cont'd)

Maintenance Safety

- Read the instructions before you begin, and make sure you have the tools and skills required.
- To help prevent the motorcycle from falling over, park it on a firm, level surface, using the side stand or a maintenance stand to provide support.
- To reduce the possibility of a fire or explosion, be careful when working around gasoline. Use only a non-flammable (high flash point) solvent such as kerosene—not gasoline—to clean parts. Keep cigarettes, sparks, and flames away from all fuel-related parts.

Maintenance Schedule

To maintain the safety and reliability of your motorcycle, regular inspection and service is required as shown in the Maintenance Schedule that follows.

The Maintenance Schedule lists items that can be performed with basic mechanical skills and hand tools. Procedures for these items are provided in this manual.

The Maintenance Schedule also includes items that involve more extensive procedures and may require special training, tools, and equipment. Therefore, we recommend that you have your Honda dealer perform these tasks unless you have advanced mechanical skills and the required tools. Procedures for items in this schedule are provided in a service manual available for purchase from your dealer (page 144).

Because your motorcycle does not have an odometer, service intervals in the maintenance schedules are expressed in terms of riding days as well as miles. To avoid overlooking required service, we urge you to develop a convenient way to record the number of days and/or miles you ride.

If you do not feel capable of performing a given task or need assistance, remember that your Honda dealer knows your motorcycle best and is fully equipped to maintain and repair it. If you decide to do your own maintenance, use only genuine Honda parts or their equivalents for repair or replacement to ensure the best quality and reliability.

Maintenance Schedule

Perform the pre-ride inspection (page 25) at each scheduled maintenance period.

Each item on the maintenance schedule requires some mechanical knowledge. Certain items (particularly those marked * and **) may require more technical information and tools. Consult your Honda dealer.

* Should be serviced by your Honda dealer, unless the owner has the proper tools and service data and is mechanically qualified. Refer to the official Honda Service Manual (page 144).

**In the interest of safety, we recommend these items be serviced only by your Honda dealer.

Summary of Maintenance Schedule Notes and Procedures:

NOTE:

1. Service more frequently when ridden in wet or dusty conditions.

Maintenance Procedures:

I: inspect and clean, adjust, lubricate, or replace, if necessary
C: clean
A: adjust
L: lubricate
R: replace

Maintenance Schedule

		Items \ Frequency	Whichever Comes First ⇨		Initial Maint.	Regular Maint. Interval				Refer to page:
				mi	100	600	1,200	1,800	2,400	
				km	150	1,000	2,000	3,000	4,000	
			Note	Month	1	6	12	18	24	
EMISSION RELATED ITEMS	*	Fuel Line					I		I	—
	*	Throttle Operation					I		I	68
		Air Cleaner	Note 1			C	C	C	C	65
		Spark Plug				I	I	I	I	77
	*	Valve Clearance			I	I	I	I	I	73
		Engine Oil			R	R	R	R	R	60
	* *	Engine Oil Strainer Screen					C		C	—
	* *	Engine Oil Centrifugal Filter					C		C	—
	* *	Engine Idle Speed			I	I	I	I	I	76

* Should be serviced by your Honda dealer, unless the owner has the proper tools and service data and is mechanically qualified. Refer to the official Honda Service Manual (page 144).

** In the interest of safety, we recommend these items be serviced only by your Honda dealer.

Maintenance Schedule

		Items \ Frequency	Whichever Comes First ⇨		Initial Maint.	Regular Maint. Interval				Refer to page:
				mi	100	600	1,200	1,800	2,400	
				km	150	1,000	2,000	3,000	4,000	
			Note	Month	1	6	12	18	24	
NON-EMISSION RELATED ITEMS		Drive Chain	Note 1		I, L	I, L: every 300 mi (500 km) or 3 month				99
		Drive Chain Slider				I	I	I	I	100
		Brake Shoe Wear				I	I	I	I	87
		Brake System			I	I	I	I	I	84
		Clutch System			I	I	I	I	I	71
		Side Stand					I		I	98
	*	Suspension					I		I	81
	*	Spark Arrester				C: every 1,000 mi (1,600 km) or every 100 operating hours				79
	*	Nuts, Bolts, Fasteners			I		I		I	—
	* *	Wheels/Tires			I	I	I	I	I	89, 94
	* *	Steering Head Bearings			I		I		I	—

* Should be serviced by your Honda dealer, unless the owner has the proper tools and service data and is mechanically qualified. Refer to the official Honda Service Manual (page 144).

** In the interest of safety, we recommend these items be serviced only by your Honda dealer.

Maintenance Record

Keeping an accurate maintenance record will help ensure that your motorcycle is properly maintained. Use the space under Notes to record anything you want to remind yourself about or mention to your dealer. Of course, if you find any problem while servicing your motorcycle, be sure it is corrected as soon as possible.

Miles (km)	Date	Performed By:	Notes
600 (1,000)			
1,200 (2,000)			
1,800 (3,000)			
2,400 (4,000)			
3,000 (5,000)			
3,600 (6,000)			
4,200 (7,000)			
4,800 (8,000)			
5,200 (9,000)			

Component Locations

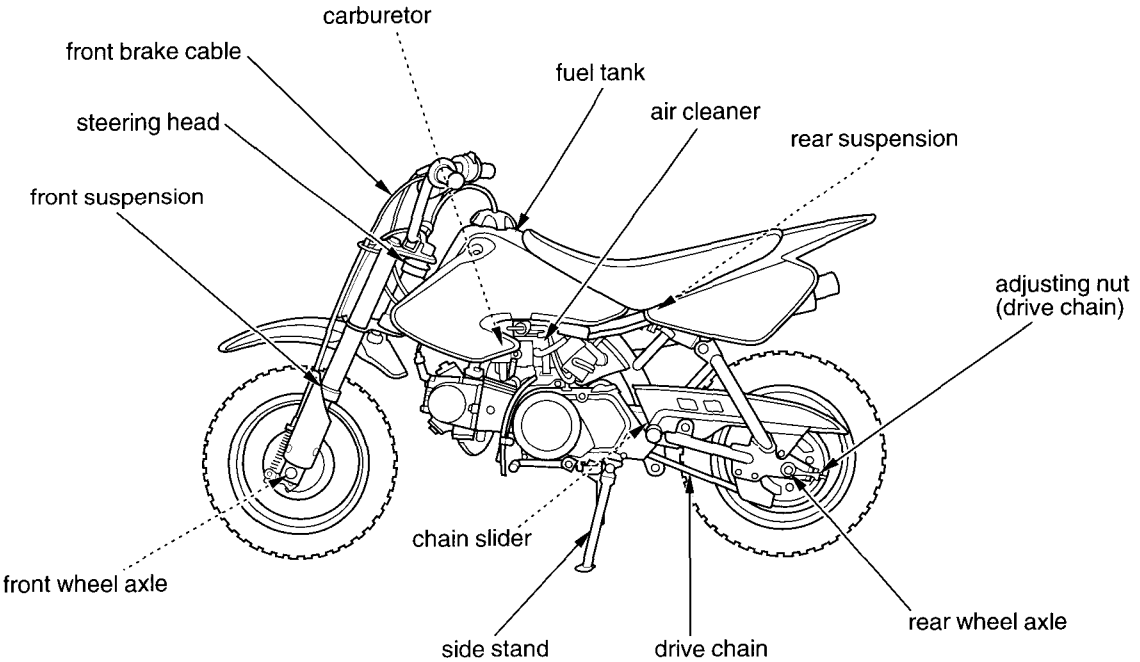

Component Locations

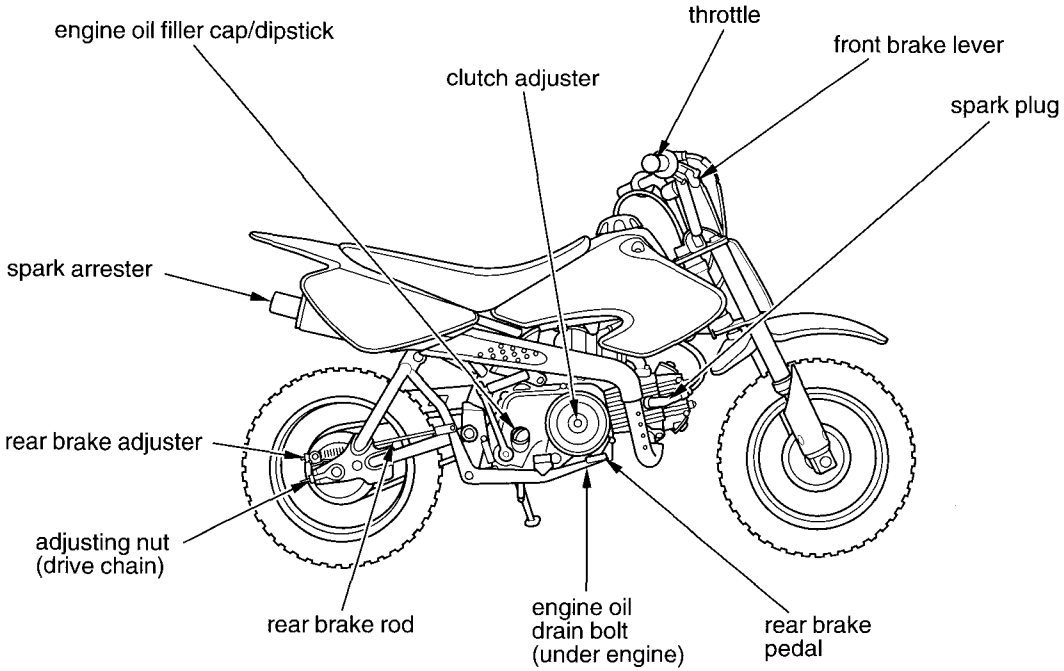

Tools

Refer to *Safety Precautions* on page 45.

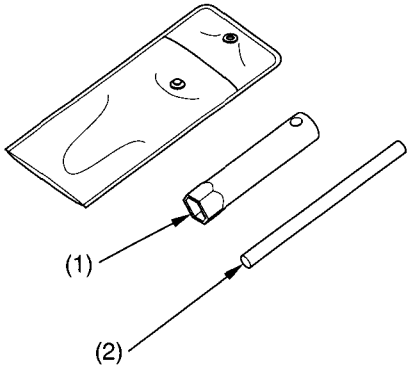

(1) spark plug wrench
(2) handle

The spark plug wrench (1) and its handle (2) are stored in the tool bag delivered with your motorcycle.

You will need to provide your own tools to perform any owner maintenance other than removing the spark plug.

Seat Removal

Refer to *Safety Precautions* on page 45 .

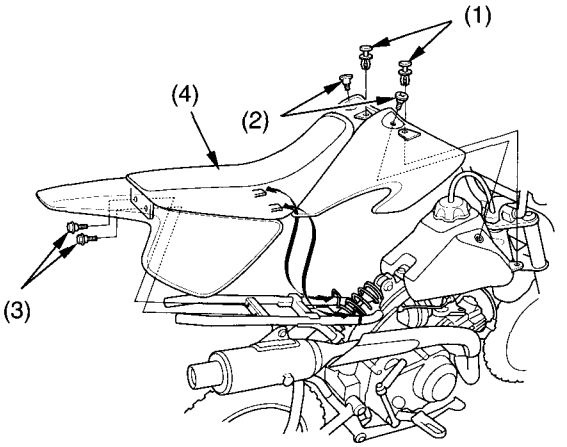

(1) clips
(2) screws
(3) bolts
(4) seat

Removal

1. Remove the clips (1) and screws (2) on the fuel tank shroud.
2. Remove the bolts (3) under the rear fender.
3. Slide the seat (4) with fuel tank shroud and rear cowl back.

Installation

1. Position the prongs under the seat into the spaces for them in the frame.
2. Install the bolts and screws and tighten them then install the clips.

Front Fork Protector Removal

Refer to *Safety Precautions* on page 45 .

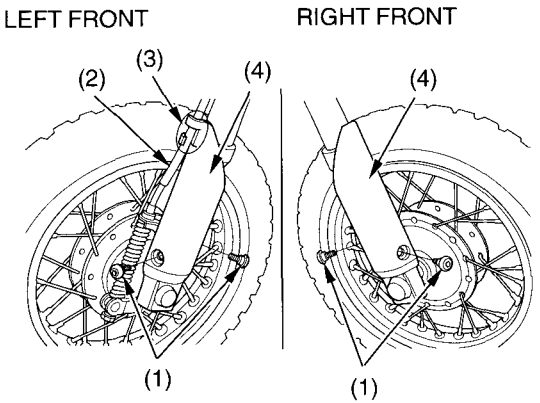

(1) bolts
(2) front brake cable
(3) cable guide
(4) front fork protector

Removal

1. Remove the two bolts (1) securing the front fork protector.
2. Remove the front brake cable (2) from the cable guide (3).
3. Remove the front fork protector.

Installation

1. Attach the fork protector on the front fork.
2. Install the securing bolts and tighten them.

Refer to *Safety Precautions* on page 45.

Fuel Recommendation

Type	unleaded
Pump Octane Number	91 (or higher)

Your engine is designed to use any gasoline that has a pump octane number of 91 or higher. Gasoline pumps at service stations normally display the pump octane number. For information on the use of oxygenated fuels, see page 141.

Use of lower octane gasoline can cause persistent "pinging" or "spark knock" (a louder rapping noise) which, if severe, can lead to engine damage. (Light pinging experienced while operating under a heavy load, such as climbing a hill, is no cause for concern.)

If pinging or spark knock occurs at a steady engine speed under normal load, change brands of gasoline. If pinging or spark knock persists, consult your Honda dealer.

We recommend that you use unleaded fuel because it produces fewer engine deposits and extends the life of exhaust system components.

Never use stale or contaminated gasoline or an oil/gasoline mixture. Avoid getting dirt, dust, or water in the fuel tank.

Fuel

Refueling Procedure

Fuel Tank Capacity, including reserve:
0.79 US gal (3.0 ℓ , 0.66 Imp gal)

Reserve Capacity:
0.24 US gal (0.9 ℓ , 0.20 Imp gal)

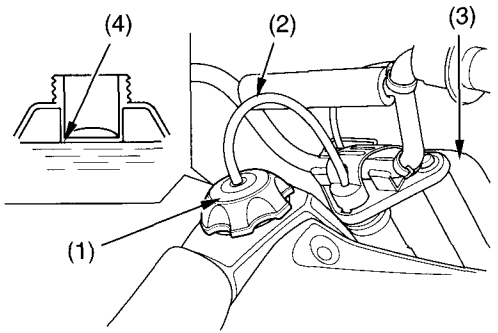

(1) fuel fill cap
(2) breather tube
(3) front number plate
(4) filler neck

1. To open the fuel fill cap (1), pull the breather tube (2) away from the front number plate (3). Turn the fuel fill cap counterclockwise and remove it.
2. Add fuel until the level reaches the bottom of the filler neck (4). Avoid overfilling the tank. There should be no fuel in the filler neck.

⚠ WARNING

Gasoline is highly flammable and explosive. You can be burned or seriously injured when handling fuel.

- Stop the engine and keep heat, sparks and flame away.
- Handle fuel only outdoors.
- Wipe up spills immediately.

3. After refueling, turn the fuel fill cap clockwise until it is secure.
4. Check that the breather tube is properly seated in the front number plate.

If you replace the fuel fill cap, use only a genuine Honda replacement part.

Engine Oil

Refer to *Safety Precautions* on page 45 .

Using the proper oil, and regularly checking, adding, and changing oil will help extend your engine's life. Even the best oil wears out. Changing oil helps get rid of dirt and deposits held in the engine. Operating the engine with old or dirty oil can damage your engine. Running the engine with insufficient oil can cause serious damage to the engine and transmission.

Oil Recommendation

API Classification	SF or SG
Viscosity (weight)	SAE 10W-40*
Suggested Oil	Pro Honda GN4 4-stroke oil (USA & Canada), or Honda 4-stroke oil (Canada only), or an equivalent**

* For normal air temperatures. See page 64 for additional temperature/viscosity information.

**Use oil manufactured specifically for motorcycles. Do not use oils with graphite or molybdenum additives. They may adversely affect clutch operation.

Checking & Adding Oil

RIGHT SIDE

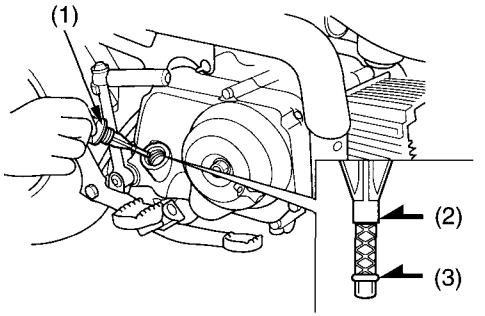

(1) oil filler cap/dipstick
(2) upper level mark
(3) lower level mark

1. Park your motorcycle on a firm, level surface.
2. Clean around the oil filler cap/dipstick (1) and nearby surfaces.
3. Start the engine and let it idle for a few minutes. Stop the engine. Wait a few minutes.
4. Immediately unscrew and remove the oil filler cap/dipstick. Wipe it clean.
5. Hold the motorcycle upright.
6. Insert the dipstick until it seats, but do not screw it in.
7. Remove the dipstick and check the oil level.
   - If the oil is at or near the upper level mark (2), you do not have to add oil.
   - If the oil is below or near the lower level mark (3), add the recommended oil until it reaches the upper level mark. (Do not overfill.)

8. Insert the dipstick and screw it in tightly.
9. Check for oil leaks.

Changing Engine Oil

RIGHT SIDE

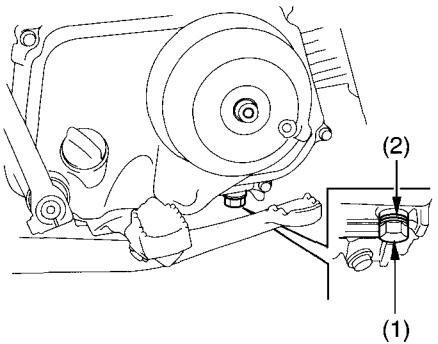

(1) oil drain bolt
(2) sealing washer

1. If the engine is cold, start it and let it idle for 3-5 minutes. Turn the engine off. Wait 2-3 minutes for the oil to settle.
2. Park your motorcycle on a firm, level surface.
3. Remove the oil filler cap/dipstick.
4. Place a drain pan under the crankcase.
5. Unscrew and remove the oil drain bolt.
6. After most of the oil is drained, gently tilt the motorcycle from side to side to drain the remaining oil.
7. Pour the drained oil into a suitable container and dispose of it in an approved manner (page 116).

8. Remove the old sealing washer (2) and install a new sealing washer on the drain bolt.
9. Install the oil drain bolt and tighten to the specified torque:
   18 lbf·ft (25 N·m , 2.5 kgf·m)
10. Pour the recommended oil into the crankcase, approximately:
    0.6 US qt (0.6 ℓ , 0.5 Imp qt)
11. Install the oil filler cap/dipstick securely.
12. Start the engine. Let it idle 2-3 minutes, then turn it off.
13. With the motorcycle held upright on level ground, check the oil level.
    If needed, add oil (page 61) until it reaches the upper level mark. (Do not overfill.)
14. Check for oil leaks.

Engine Oil

More About: Engine Oil

- When you buy oil, check the label to make sure it matches the recommendation.
- Engine oil is a major factor affecting the performance and service life of the engine. Non-detergent, vegetable, or castor-based racing oils are not recommended.
- Your motorcycle does not need any oil additives. Use the recommended oil.
- Other viscosities shown in the following chart may be used when the average temperature in your riding area is within the indicated range.

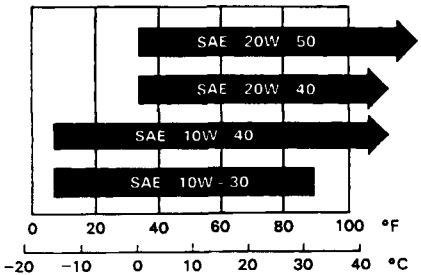

Refer to *Safety Precautions* on page 45 .

Proper air cleaner maintenance is very important for off-road vehicles. A dirty, water-soaked, worn-out, or defective air cleaner will allow dirt, dust, mud, and other impurities to pass into the engine.

Service the air cleaner more frequently if you ride in unusually wet or dusty areas. Your Honda dealer can help you determine the correct service interval for your riding conditions.

Your motorcycle's air cleaner has very specific performance requirements. Use a new genuine Honda air cleaner specified for your model or an air cleaner of equal quality.

NOTICE

Using the wrong air cleaner can result in premature engine damage.

Proper air cleaner maintenance can prevent premature engine wear or damage, expensive repairs, low engine power, poor gas mileage, and spark plug fouling.

NOTICE

Improper or lack of proper air cleaner maintenance can cause poor performance and premature engine wear.

Air Cleaner

Cleaning

LEFT SIDE

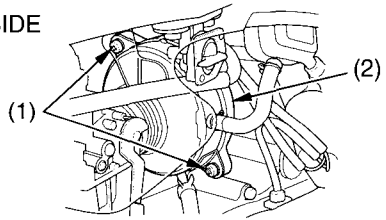

(1) attaching screws
(2) air cleaner housing cover

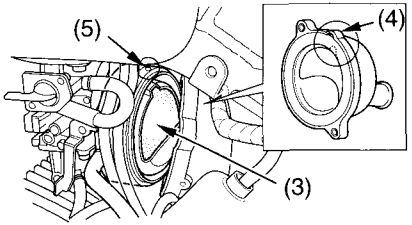

(3) air cleaner
(4) projection (air cleaner housing cover)
(5) projection (air cleaner housing)

1. Remove the two attaching screws (1) and the air cleaner housing cover (2).
2. Remove the air cleaner (3).
3. Gently wash the air cleaner in clean, non-flammable (high flash point) solvent such as kerosene—not gasoline. After cleaning, gently squeeze out the remaining solvent. Avoid twisting or wringing the air cleaner. This can tear the foam.
4. Inspect for tears or cracks in the foam or seams of the air cleaner. Replace the air cleaner if it is damaged.
5. Allow the air cleaner to dry thoroughly before applying oil. A wet air cleaner will not fully absorb the oil.

6. Pour clean Pro Honda Foam Filter Oil or an equivalent (Canada: Honda Foam Filter Oil or an equivalent) over the entire surface of the air cleaner. Use both hands to evenly spread the oil into the air cleaner. Gently squeeze out any excess oil. (To keep your hands dry, place the air cleaner in a clean plastic bag before spreading the oil into the air cleaner.)
7. Clean the inside of the air cleaner housing. Install the air cleaner.
8. Install the air cleaner housing cover, aligning its projection (4) with the projection (5) on the air cleaner housing.
9. Install and tighten the two attaching screws.

Throttle

Refer to *Safety Precautions* on page 45.

Throttle Freeplay

RIGHT SIDE

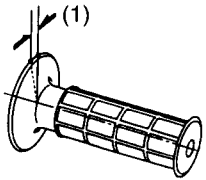

(1) freeplay

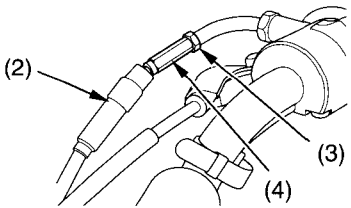

(2) dust cover
(3) lock nut
(4) adjuster

Inspection

Check freeplay (1).

Freeplay: 1/16–3/16 in (2.0–4.0 mm)

If necessary, adjust to the specified range.

Adjustment

1. Pull the rubber dust cover (2) back.
2. Loosen the lock nut (3) on the throttle cable mechanism.
3. Turn the adjuster (4).
4. Tighten the lock nut. Return the dust cover to its normal position.
5. After adjustment, check for smooth rotation of the throttle grip from fully closed to fully open in all steering positions.

If you can't get the freeplay within the specified range, contact your Honda dealer.

Throttle Inspection

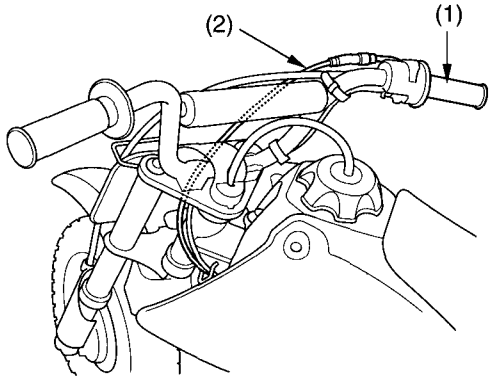

(1) throttle
(2) throttle cable

1. Check that the throttle assembly is positioned properly and the securing bolts are tight.
2. Check for smooth rotation of the throttle (1) from fully open to fully closed in all steering positions. If there is a problem, see your Honda dealer.
3. Inspect the condition of the throttle cable (2) from the throttle grip down to the carburetor. If the cable is kinked or chafed, have it replaced.
4. Check the cable for tension or stress in all steering positions.
5. Lubricate the cable with a commercially-available cable lubricant to prevent premature rust and corrosion.

Throttle Limiter Adjustment

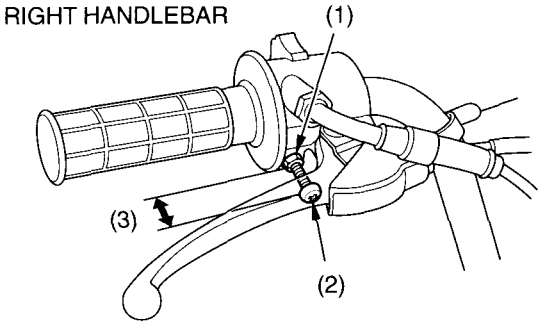

(1) lock nut
(2) throttle limiter screw
(3) throttle limiter screw measurement

1. Loosen the lock nut (1).
2. Turn the throttle limiter screw (2) clockwise to reduce throttle grip movement or counterclockwise to increase throttle grip movement.

   The throttle limiter screw measurement (3) is 13/16 in (21 mm) when the throttle is fully open; less than 13/16 in (21 mm) when the throttle opening (and maximum engine speed) is restricted.
3. Hold the screw in place and tighten the lock nut.

To prevent moisture or debris (dirt, sand, pebbles, sticks, etc.) from entering the throttle housing, do not remove the throttle limiter screw.
Moisture and debris may interfere with proper throttle operation.

Refer to *Safety Precautions* on page 45.

Inspection

The engine should start easily with the kickstarter without the clutch slipping. When shifting gears, the clutch operation should be smooth and light, especially when shifting into neutral.

Adjustment

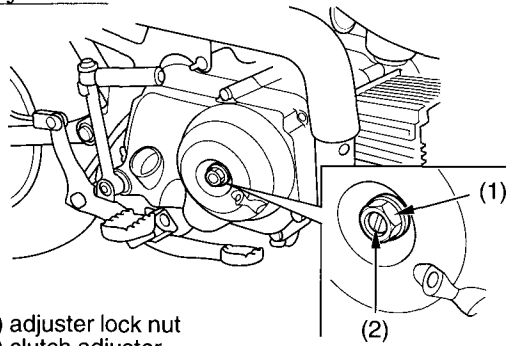

(1) adjuster lock nut
(2) clutch adjuster

1. Loosen the adjuster lock nut (1).
2. Turn the clutch adjuster (2) clockwise one turn; do not turn excessively.

(cont'd)

3. Slowly turn the adjuster counterclockwise until a slight resistance is felt.
4. From this position, turn the adjuster clockwise 1/8 to 1/4 turn, and tighten the lock nut.
5. After adjustment, test ride the motorcycle to be certain the clutch operates properly.

If you can't get proper adjustment, or the clutch does not work properly, see your Honda dealer.

Refer to *Safety Precautions* on page 45.

Excessive valve clearance will cause noise and eventual engine damage. Little or no clearance will prevent the valve from closing and cause valve damage and power loss. Check valve clearance when the engine is cold at the intervals specified in the Maintenance Schedule.

The checking or adjusting of the clearance should be performed while the engine is cold. The clearance will change as engine temperature rises.

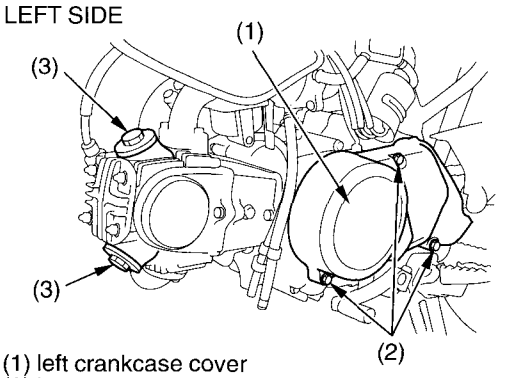

(1) left crankcase cover
(2) bolts
(3) adjusting hole caps

1. Remove the left crankcase cover (1) by removing the bolts (2).
2. Remove the adjusting hole caps (3).

(cont'd)

Valve Clearance

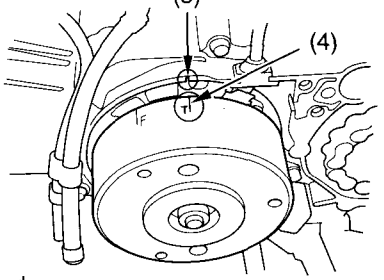

(4) T mark
(5) index mark

3. Rotate the generator flywheel counterclockwise until the T mark (4) on the flywheel lines up with the index mark (5) on the crankcase. In this position, the piston may either be on the compression or exhaust stroke.

The adjustment must be made when the piston is at the top of the compression stroke when both the intake and exhaust valves are closed. This condition can be determined by moving the rocker arms. If they are free, it is an indication that the valves are closed and that the piston is on the compression stroke. If they are tight and the valves are open, rotate the flywheel 360° and realign the T mark to the index mark.

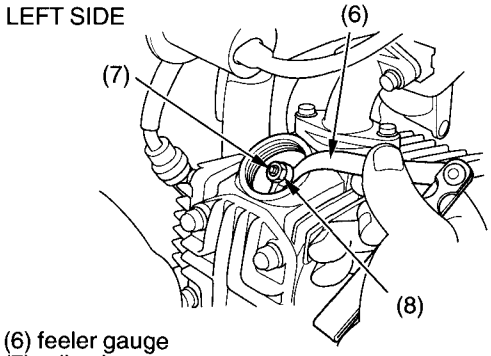

(6) feeler gauge
(7) adjusting screw
(8) adjusting screw lock nut

4. Check the clearance of both valves by inserting a feeler gauge (6) between the adjusting screw (7) and the valve stem. Clearance should be:
   0.002 in (0.05 mm)

5. If it is necessary to make an adjustment, loosen the adjusting screw lock nut (8) and turn the adjusting screw (7) so there is a slight resistance when the feeler gauge (6) is inserted.

   After completing the adjustment, tighten the adjusting screw lock nut while holding the adjusting screw to prevent it from turning. Finally, recheck the clearance to make sure that the adjustment has not been disturbed.

Engine Idle Speed

Refer to *Safety Precautions* on page 45.

LEFT SIDE

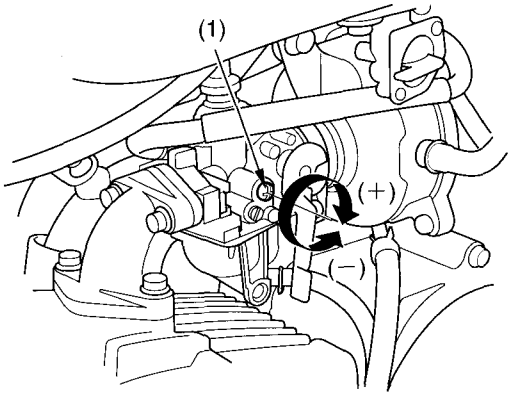

(1) throttle stop screw

(+) increase rpm
(−) decrease rpm

The engine must be at normal operating temperature for accurate idle speed adjustment. Ten minutes of stop-and-go riding is sufficient.

Do not attempt to compensate for faults in other systems by adjusting idle speed. See your Honda dealer for regularly scheduled carburetor adjustments.

1. Warm up the engine, shift to neutral and place the motorcycle on its stand.
2. Connect a tachometer, following the tachometer manufacturer's instructions.
3. Adjust idle speed with the throttle stop screw (1).
   Idle Speed: 1,700 ± 100 rpm

Refer to *Safety Precautions* on page 45 .

Spark Plug Recommendation

The recommended standard spark plug is satisfactory for most riding conditions. However, if you plan to ride for extended periods at high speeds or near maximum power (high engine rpm) in hot climates, or plan extended riding in cold climates, a different plug may be recommended.

Standard	CR6HSA (NGK) or U20FSR-U (DENSO)
For cold climate (below 5°C, 41°F)	CR5HSA (NGK) or U16FSR-U (DENSO)
For extended high speed riding	CR7HSA (NGK) or U22FSR-U (DENSO)

Use only the recommended type of spark plugs in the recommended heat range.

NOTICE

Using spark plugs with an improper heat range can cause engine damage.

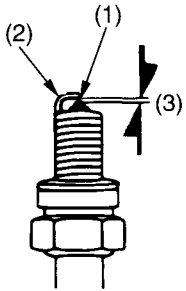

(1) center electrode
(2) side electrode
(3) spark plug gap

Spark Plug

1. Clean any dirt from around the spark plug base.
2. Disconnect the spark plug cap.
3. Remove the spark plug with a plug wrench.
4. Inspect the spark plug electrodes for wear. The center electrode (1) should have square edges. The side electrode (2) should not be eroded. The insulator should not be cracked or chipped.
5. Check the spark plug gap (3), using a wire-type feeler gauge. If adjustment is necessary, bend the side electrode carefully. The gap should be:
   0.024 – 0.028 in (0.60 – 0.70 mm)
   Make sure the plug washer is in good condition.
   If you have to install a new plug, first check the gap.
6. With the plug washer attached, thread the spark plug in by hand (to prevent cross-threading).
7. Tighten the spark plug:
   - about 1/8-1/4 turn after it seats (if the old plug is good).
   - about 1/2 turn after it seats (if installing a new plug).

NOTICE

Improperly tightened spark plugs can damage the engine. Too loose, you can burn a piston. Too tight, you can damage the threads.

Refer to *Safety Precautions* on page 45.

The spark arrester must be serviced every 100 operating hours to maintain its efficiency.

Regular servicing prevents carbon buildup (which can diminish engine performance) and also complies with USDA regulations for regular maintenance to assure proper function. The spark arrester prevents random sparks from the combustion process in your engine from reaching the environment.

RIGHT REAR

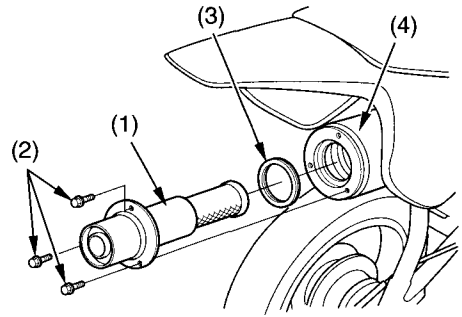

(1) spark arrester
(2) bolts
(3) gasket
(4) muffler

1. Allow the engine and muffler to cool.
2. Remove the three bolts (2), the spark arrester (1), and the gasket (3) from the muffler (4).

Spark Arrester

3. Use a brush to remove carbon deposits from the spark arrester screen. Be careful to avoid damaging the spark arrester screen. The spark arrester must be free of breaks and holes. Replace, if necessary. Check the gasket. Replace, if necessary.

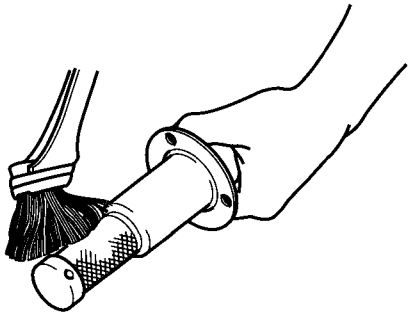

4. Install the spark arrester and the gasket in the muffler and tighten the three bolts securely.

Refer to *Safety Precautions* on page 45 .

Loose, worn, or damaged suspension components may adversely affect the handling and stability of your motorcycle. If any suspension components appear worn or damaged, see your Honda dealer for further inspection. Your dealer is qualified to determine whether or not replacement parts or repairs are needed.

Front Suspension Inspection

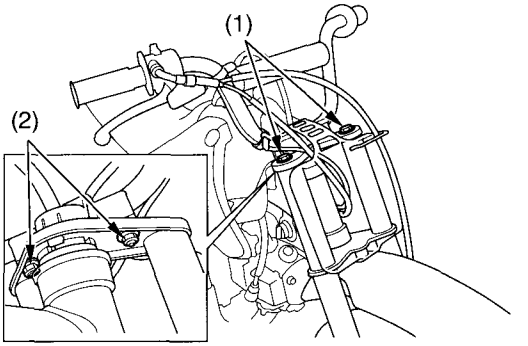

(1) mounting bolts (2) mounting nuts

1. Check fork operation. Pull the front brake lever in, to lock the brake. Then pump up and down on the fork legs several times. The suspension should function smoothly. There should be no oil leakage.

2. Check the security of all fork mounting bolts (1) and handle bar mounting nuts (2). If any front suspension components appear worn or damaged, see your Honda dealer for further inspection.

Rear Suspension Inspection

LEFT SIDE

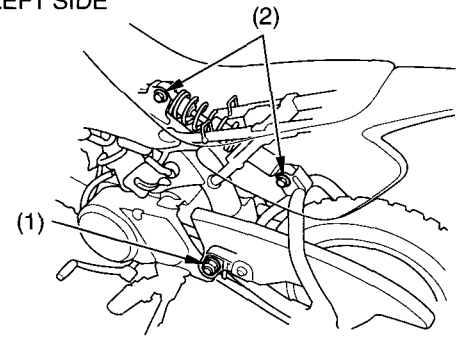

(1) swingarm bushing
(2) shock absorber attachment points

RIGHT SIDE

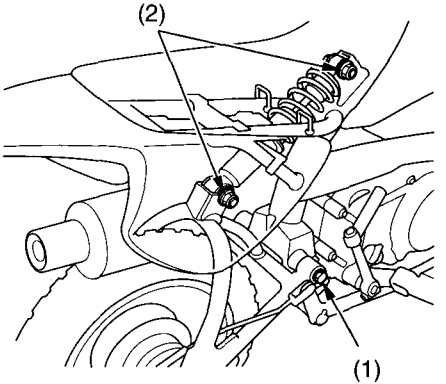

(1) swingarm bushing
(2) shock absorber attachment points

1. Place the motorcycle on a maintenance stand. Push hard against the side of the rear wheel and feel for any freeplay which indicates worn swingarm bushings (1).

2. Check that the fasteners for the shock absorber attachment points (2) are secure.
3. Check for oil leaks in the shock absorber. If any rear suspension components appear worn or damaged, see your Honda dealer for further inspection.

Refer to *Safety Precautions* on page 45.

Front Brake Lever Freeplay

RIGHT SIDE

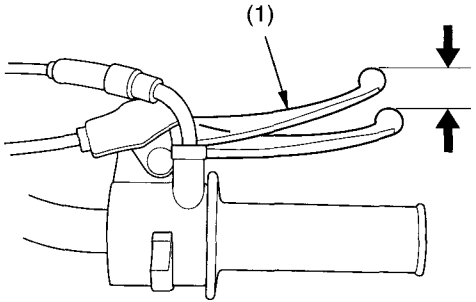

(1) front brake lever

Inspection

Check freeplay by pulling in slowly on the front brake lever (1) until the brake starts to engage.

Freeplay: 3/8 – 13/16 in (10 – 20 mm)

If necessary, adjust to the specified range.

LEFT FRONT

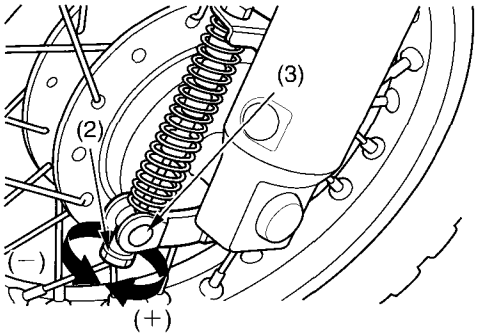

(2) adjusting nut
(3) brake arm pin

(+) increase freeplay
(−) decrease freeplay

Adjustment

1. Turn the front brake adjusting nut (2). Make sure the cut-out on the adjusting nut is seated on the brake arm pin (3).
2. Apply the brake, release it, then spin the wheel and check that it rotates freely. Repeat this procedure several times.
3. Check the freeplay. If you cannot adjust the freeplay properly, see your Honda dealer.

Rear Brake Pedal Freeplay

RIGHT SIDE

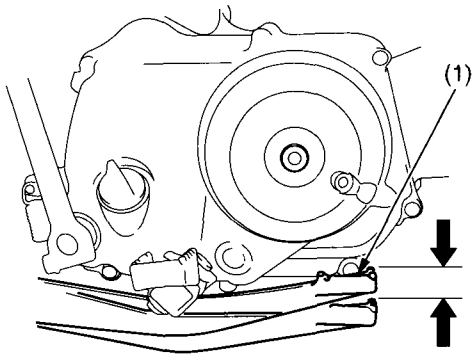

(1) rear brake pedal

Inspection

1. Place your motorcycle on its side stand.
2. Check freeplay by slowly depressing the brake pedal (1) until the brake starts to engage.
   Freeplay: 3/8 – 13/16 in (10 – 20 mm)

   If necessary, adjust to the specified range.

Adjustment

RIGHT REAR

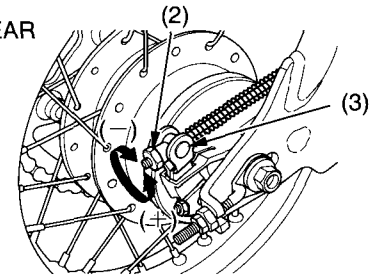

(2) adjusting nut
(3) brake arm pin

(+) increase freeplay
(–) decrease freeplay

1. Turn the rear brake adjusting nut (2). Make sure the cut-out on the adjusting nut is seated on the brake arm pin (3).
2. Apply the brake, release it, and then spin the wheel and check that it rotates freely. Repeat this procedure several times.
3. Check the freeplay. If you can't adjust the freeplay properly, see your Honda dealer.

Brake Shoe Wear

The front and rear brakes are equipped with external brake wear indicators that let you check brake wear without disassembly. Application of the brake control (lever or pedal) causes the arrow on the brake arm to move toward a reference mark on the brake panel.

LEFT FRONT

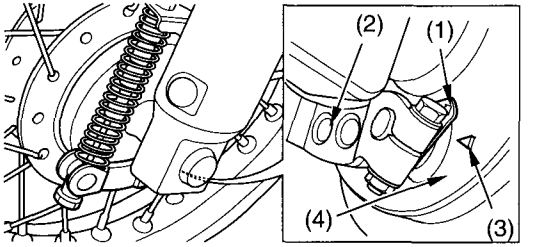

(1) arrow
(2) brake arm
(3) reference mark
(4) brake panel

RIGHT REAR

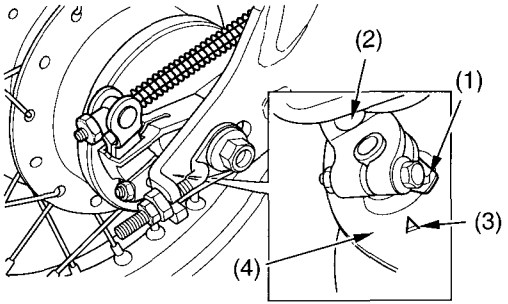

(1) arrow
(2) brake arm
(3) reference mark
(4) brake panel

1. Place your motorcycle on its side stand.
2. Apply the brake control (lever or pedal) and check the movement of the arrow (1) on the brake arm (2). Replace the brake shoes if the arrow aligns with the reference mark (3) on the brake panel (4) upon full application of the brake. If replacement is necessary, see your Honda dealer.

Other Inspections & Lubrication

- Check that the front lever and rear pedal assemblies are positioned properly and the securing bolts are tight.
- Check the front brake cable for kinks or signs of wear that could cause sticking or failure.
- Lubricate the front brake cable with a commercially-available cable lubricant to prevent premature wear and corrosion.
- Front: Make sure the brake arm, spring, and fasteners are in good condition.
- Rear: Make sure the brake rod, brake arm, spring, and fasteners are in good condition.

Refer to *Safety Precautions* on page 45 .

Maintenance of spoke tension and wheel trueness (roundness) is critical to safe motorcycle operation. During the first 100 miles (150 km), spokes will loosen more rapidly due to the initial seating of the parts. Excessively loose spokes may result in instability at high speeds and the possible loss of control. It's also important that the rim locks are secure to prevent tire slippage.

It is not necessary to remove the wheels to perform the recommended service in the Maintenance Schedule. However, information for wheel removal is provided for emergency situations.

Wheel Rims & Spokes

REAR

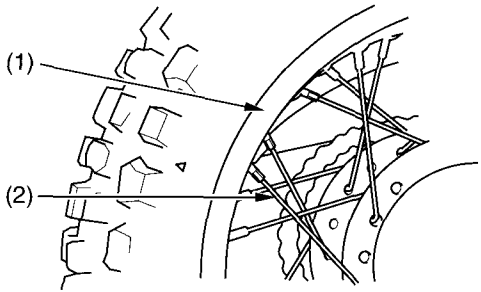

(1) wheel rim
(2) spoke

1. Inspect the wheel rims (1) and spokes (2) for damage.
2. Tighten any loose spokes.

3. Rotate the wheel slowly to see if it appears to "wobble." If it does, the rim is out of round or not "true." If the wobble is noticeable, see your Honda dealer for inspection.

Front Wheel Removal

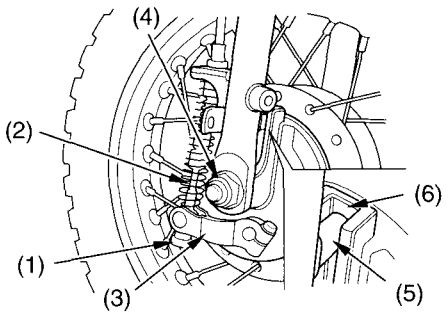

(1) brake adjusting nut
(2) brake cable
(3) brake arm
(4) front axle nut
(5) lug
(6) slot

Removal

1. Raise the front wheel off the ground by placing a maintenance stand or support block under the engine. Secure the rear of the motorcycle with tie-down straps.
2. Remove the front fork protector (page 56).
3. Unscrew the front brake adjusting nut (1). Pull the front brake lever in and disconnect the brake cable (2) from the brake arm (3).
4. Remove the front axle nut (4) and front axle.
5. Remove the wheel.
6. Pull the brake assembly out carefully.

Take care to prevent getting grease, oil, or dirt on the brake shoe surfaces. This can cause poor brake performance or rapid brake shoe wear after reassembly.

Installation

1. Reverse the removal procedure. Make sure the lug (5) on the fork leg is located in the slot (6) in the brake panel.
2. Torque the axle to:
   35 lbf·ft (47 N·m , 4.8 kgf·m)
3. Check front brake adjustment (page 84).

If a torque wrench was not used to install the wheel, see your Honda dealer as soon as possible to verify proper assembly. Improper assembly may lead to loss of braking capacity.

Rear Wheel Removal

RIGHT REAR LEFT REAR

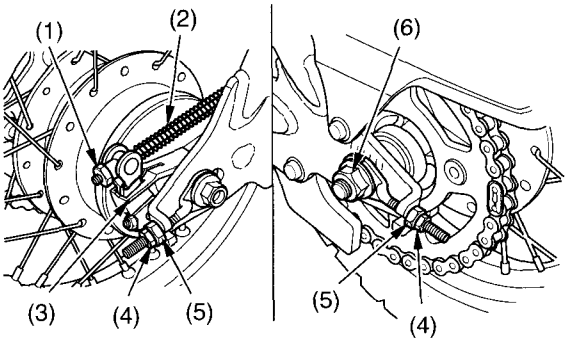

(1) adjuster
(2) brake rod
(3) brake arm
(4) lock nut
(5) adjusting nut
(6) axle nut

Removal

1. Raise the rear wheel off the ground by placing a maintenance stand or support block under the engine. Secure the front of the motorcycle with tie-down straps.
2. Unscrew the rear brake adjuster (1). Press the rear brake pedal and disconnect the brake rod (2) from the brake arm (3).
3. Loosen the lock nut (4) and adjusting nut (5) on the chain adjuster on both sides.
4. Unscrew the axle nut (6). Pull the axle out. Push the wheel forward and derail the drive chain from the rear sprocket. Remove the wheel.
   Take care to prevent getting grease, oil, or dirt on the brake shoe surfaces. This can cause poor brake performance or rapid brake shoe wear after reassembly.

RIGHT REAR

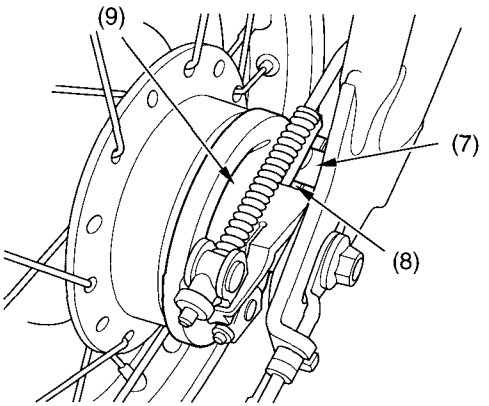

(7) lug
(8) slot
(9) brake panel

Installation

1. Reverse the removal procedure. Make sure the lug (7) on the swingarm is located in the slot (8) in the brake panel (9). Check that the chain adjusters are installed properly.
2. Adjust the drive chain (page 102).
3. Torque the axle nut to:
   35 lbf·ft (47 N·m , 4.8 kgf·m)
4. Adjust the rear brake (page 86).
5. Apply the rear brake, release it, then spin the wheel and check that it rotates freely. Repeat this procedure several times.

If a torque wrench was not used to install the wheel, see your Honda dealer as soon as possible to verify proper assembly. Improper assembly may lead to loss of braking capacity.

Tires & Tubes

Refer to *Safety Precautions* on page 45.

To safely operate your motorcycle, the tires must be the proper type (off-road) and size, in good condition with adequate tread, and correctly inflated.

⚠ WARNING

Using tires that are excessively worn or improperly inflated can cause a crash in which you can be seriously hurt or killed.

Follow all instructions in this owner's manual regarding tire inflation and maintenance.

The following pages give detailed information on how and when to check your air pressure, how to inspect your tires for wear and damage, and our recommendations on tire repair and replacement.

Air Pressure

Properly inflated tires provide the best combination of handling, tread life, and riding comfort. Generally, underinflated tires wear unevenly, adversely affect handling, and are more likely to fail from being overheated. Underinflated tires can also cause wheel damage in rocky terrain. Overinflated tires make your motorcycle ride more harshly, are more prone to damage from surface hazards, and wear unevenly.

Make sure the valve stem caps are secure. If necessary, install a new cap.

Always check air pressure when your tires are "cold." If you check air pressure when your tires are "warm" — even if your motorcycle has only been ridden for a few miles — the readings will be higher. If you let air out of warm tires to match the recommended cold pressures, the tires will be underinflated. The correct "cold" tire pressures are:

Front	15 psi (100 kPa , 1.0 kgf/cm²)
Rear	18 psi (125 kPa , 1.25 kgf/cm²)

If you decide to adjust tire pressures for a particular riding condition, make changes a little at a time.

Inspection

A flat tire or blowout is inconvenient and may even cause an accident. Take time to inspect your tires and wheels before you ride. For more information about handling flat tires, see page 122.

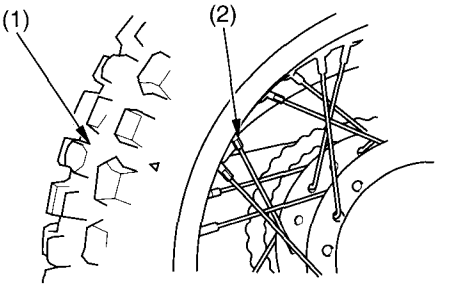

(1) tire tread depth
(2) spoke nut

- Inspect carefully for bumps or bulges in the side of the tire or the tread. Replace any tire that has a bump or bulge.
- Look closely for cuts, slits, or cracks in the tires. Replace a tire if you can see fabric or cord.
- Check for rocks or other objects embedded in the tire or tread. Remove any objects.
- Measure tread depth (1). Replace the tire before depth at the center reaches 0.12 in (3 mm), or any time you notice a reduction in traction.
- Check the position of both valve stems. A tilted valve stem indicates the tube is slipping inside the tire or the tire is slipping on the rim. See your Honda dealer.

Tube Replacement

If a tube is punctured or damaged, you should replace it as soon as possible. A repaired tube may not have the same reliability as a new one, and it may fail while you are riding. For information on making a temporary repair, see page 122 .

Use a replacement tube equivalent to the original.

We recommend that tubes be replaced by your Honda dealer. Replacing a tube requires removing and reinstalling the wheel. Any time a tube is replaced, carefully inspect the tire as described on page 94 .

Tire Replacement

The tires that came on your motorcycle were designed to provide a good combination of handling, braking, durability, and comfort across a broad range of riding conditions.

⚠ WARNING

Installing improper tires on your motorcycle can affect handling and stability. This can cause a crash in which you can be seriously hurt or killed.

Always use the size and type of tires recommended in this owner's manual.

Front	2.50-10 33J
Rear	2.50-10 33J

- Use a replacement tire equivalent to the original.
- Replace the tube any time you replace a tire. The old tube will probably be stretched and, if installed in a new tire, could fail.
- Have the wheel balanced after a new tire is installed.
- We recommend that tires be replaced by your Honda dealer.

Side Stand

Refer to *Safety Precautions* on page 45 .

LEFT SIDE

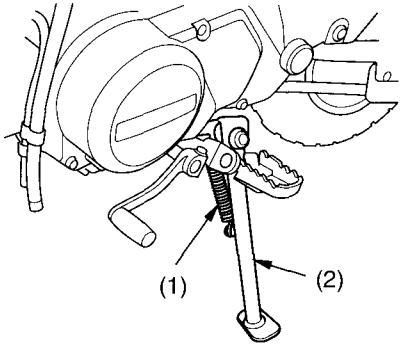

(1) side stand spring
(2) side stand

1. Check the side stand spring (1) for damage and loss of tension.
2. Check the side stand assembly for freedom of movement.

If the side stand is stiff or squeaky, clean the pivot area and lubricate the pivot bolt with clean engine oil.

Refer to *Safety Precautions* on page 45.

The service life of the chain depends on proper lubrication and adjustment. Poor maintenance can cause premature wear or damage to the drive chain or sprockets.

Under severe usage, or when the motorcycle is ridden in unusually dusty or muddy areas, more frequent maintenance will be necessary.

Before servicing your drive chain, turn the engine OFF, lower the side stand, and check that your transmission is in neutral.

It is not necessary to remove or replace the drive chain to perform the recommended service in the Maintenance Schedule.

Inspection

LEFT SIDE

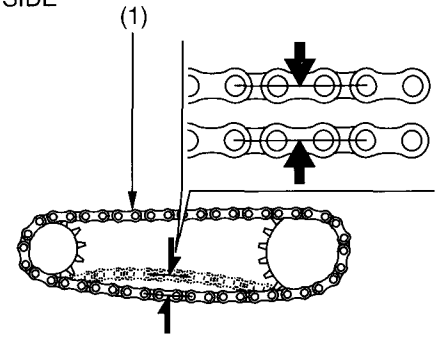

(1) *drive chain*

1. Check slack in the lower drive chain (1) run midway between the sprockets. Drive chain slack should allow the following vertical movement by hand:
   9/16 – 1 in (15 – 25 mm)

2. Check drive chain slack at several points along the chain. The slack should remain constant. If it isn't, some links may be kinked and binding. Lubricating the chain will often eliminate binding and kinking.

NOTICE

Excessive chain slack may allow the drive chain to damage the engine cases.

3. Inspect the drive chain for:
   - damaged rollers
   - loose pins
   - dry or rusted links
   - kinked or binding links
   - excessive wear

   Replace the drive chain (page 104) if it has damaged rollers, loose pins, or kinks that cannot be freed. Lubricate the drive chain (page 103) if it appears dry or shows signs of rust. Lubricate any kinked or binding links and work them free. Adjust chain slack if needed.
4. Check the chain slider (2) for wear. If the ridge (3) in the center of the slider is worn, have your Honda dealer replace the chain slider.

LEFT SIDE

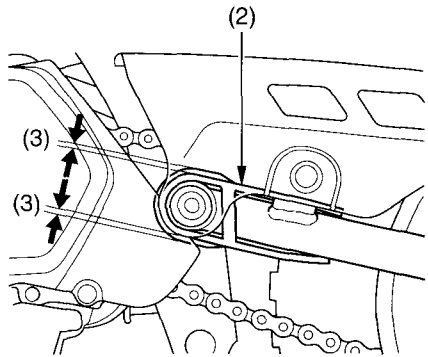

(2) chain slider (3) ridge

5. Replace the drive chain if chain slack is excessive when the rear axle is moved to the farthest limit of adjustment. Excessive slack indicates the chain is worn beyond its service limit.
   To check the chain's service limit, remove the drive chain (page 104). Then measure the distance between a span of 77 pins, from pin center to pin center. If the distance exceeds the service limit, the drive chain is worn out and should be replaced.

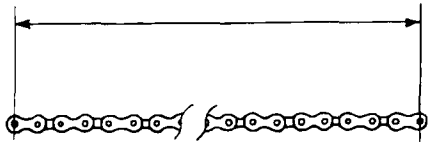

Measure a span of 77 pins

New Chain:	38.5 in (978 mm)
Service Limit:	39.3 in (997 mm)

6. Inspect the front and rear sprocket teeth for excessive wear or damage. If necessary, have your Honda dealer replace a worn sprocket.

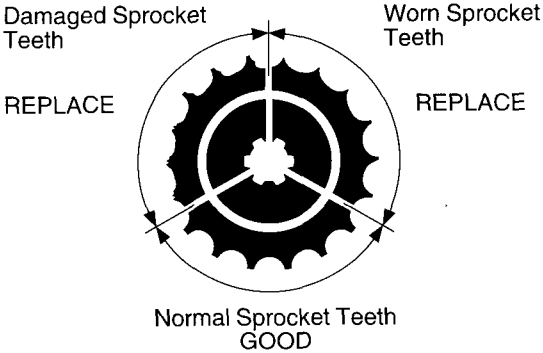

NOTICE

Use of a new chain with worn sprockets will cause rapid chain wear.

Adjustment

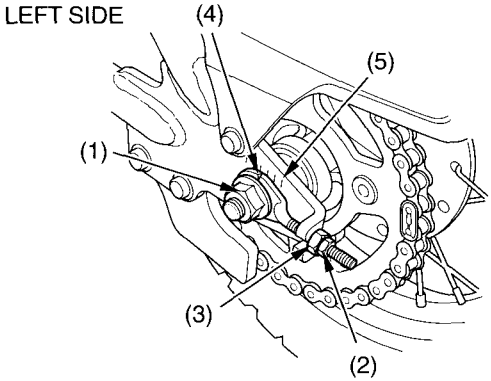

(1) rear axle nut
(2) lock nut
(3) adjusting nut
(4) adjuster index mark
(5) graduated scale

1. Loosen the rear axle nut (1).
2. Loosen the lock nuts (2) on both sides of the swingarm.

3. Turn the adjusting nuts (3) on the right and left chain adjusters an equal number of turns to increase or decrease chain slack.
4. Align the chain adjuster index marks (4) with the graduated scales (5) on both sides of the swing arm.
5. Torque the rear axle nut to:
   35 lbf·ft (47 N·m , 4.8 kgf·m)

If a torque wrench is not used for this installation, see your Honda dealer as soon as possible to verify proper assembly.

6. Tighten the adjusting nuts lightly. Then, while holding the adjusting nuts with a wrench, tighten the lock nuts.
7. Recheck drive chain slack.
8. Check rear brake pedal freeplay and adjust as necessary (page 86). Freeplay is affected when repositioning the rear wheel to adjust drive chain slack.

Lubrication

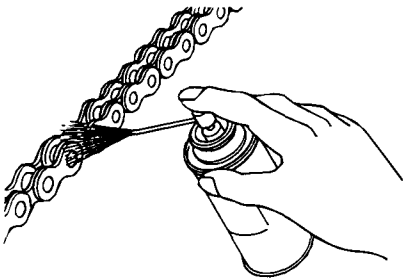

Lubricate every 300 miles (500 km) or sooner if chain appears dry.
Turn the rear wheel by hand. Saturate each chain link joint so that the lubricant penetrates between the link plates, pins, bushings, and rollers.

Drive Chain

Removal, Cleaning & Replacement

LEFT SIDE

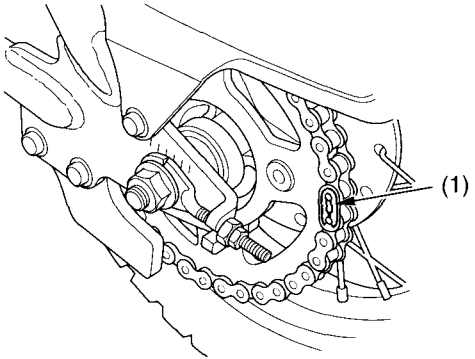

(1) master link retaining clip

When the drive chain becomes extremely dirty, it should be removed and cleaned prior to lubrication.

1. Remove the master link retaining clip (1) with pliers. Do not bend or twist the clip. Remove the master link. Remove the drive chain.
2. Clean the drive chain with a non-flammable (high flash point) solvent such as kerosene — not gasoline — and allow it to dry.
3. Inspect the drive chain for possible wear or damage. Replace the drive chain if it has damaged rollers, loose fitting links, or otherwise appears unserviceable.

4. Inspect the sprocket teeth for wear or damage. We recommend replacing the sprocket whenever a new chain is installed.
5. Lubricate the drive chain.
6. Pass the chain over the sprockets and join the ends of the chain with the master link. For ease of assembly, hold the chain ends against adjacent rear sprocket teeth while inserting the master link. Install the master link retaining clip so that the closed end of the retaining clip will face the direction of forward wheel rotation.

More About: Drive Chain

- The master link is the most critical element of drive chain security. Master links are reusable, as long as they remain in excellent condition. We recommend installing a new master link retaining clip when the drive chain is reassembled.
- You may find it easier to install a new chain by connecting it to the old chain with a master link and pulling the old chain to position the new chain on the sprockets.

Appearance Care

Refer to *Safety Precautions* on page 45.

Frequent cleaning and polishing will keep your Honda looking newer longer. Frequent cleaning also identifies you as an owner who values your motorcycle. A clean motorcycle is also easier to inspect and service.

While you're cleaning, be sure to look for damage, wear, and gasoline or oil leaks.

General Recommendations

- To clean your motorcycle, you may use:
  - water
  - a mild, neutral detergent and water
  - a mild spray and wipe cleaner/polisher
  - a mild spray and rinse cleaner/degreaser and water
- Avoid products that contain harsh detergents or chemical solvents that could damage the metal, paint, and plastic on your motorcycle.
- If your motorcycle is still warm from recent operation, give the engine and exhaust system time to cool off.

- We recommend the use of a garden hose to wash your motorcycle. High pressure washers (like those at coin-operated car washes) can damage certain parts of your motorcycle. If you use a high pressure washer, avoid spraying the following areas:

  wheel hubs
  muffler outlet
  area under seat
  engine stop switch
  under fuel tank
  drive chain
  carburetor

NOTICE

High pressure water (or air) can damage certain parts of your motorcycle.

Washing Your Motorcycle with a Mild Detergent

1. Rinse your motorcycle thoroughly with cool water to remove loose dirt.
2. Fill a bucket with cool water. Mix in a mild, neutral detergent, such as dish washing liquid or a product made especially for washing motorcycles or automobiles.
3. Wash your motorcycle with a sponge or a soft towel. As you wash, check for heavy grime. If necessary, use a mild cleaner/ degreaser to remove the grime.
4. After washing, rinse your motorcycle thoroughly with plenty of clean water to remove any residue.
5. Dry your motorcycle with a chamois or a soft towel.

6. Lubricate the drive chain to prevent rusting.
7. Start the engine and let it idle for several minutes. The engine heat will help dry moist areas.
8. As a precaution, ride at a slow speed and apply the brakes several times. This will help dry the brakes and restore normal braking performance.

Tips

Here's helpful advice on how to prepare for an off-road adventure, how to transport and store your Honda, and how to be an environmentally responsible motorcycle owner.

Preparing for a Ride.....110
Transporting Your Honda.....112
Storing Your Honda.....114
You & the Environment.....116

Preparing for a Ride

A safe and enjoyable ride begins with good planning and preparation. Always ride with at least one other person in case you have trouble, and let someone know where you're going and when you expect to return.

Before riding in an unfamiliar area, find out in advance if you need special permits, get maps so you can study the terrain, and talk to other riders who know the area. The Forest Service and the Bureau of Land Management (USA only), the Ministry of Natural Resources (Canada only), riding clubs, and off-road magazines are good sources of information.

What to Take to the Riding Area

Along with your motorcycle and riding gear, you should take along some tools and supplies in case you have a problem. For some of the difficulties you might encounter, see *Taking Care of the Unexpected,* which begins on page 119 .

We recommend that you always take water, food, a first aid kit, and your owner's manual. Other items you should consider loading on your truck or trailer include:

- a tool kit
- tire repair supplies and tools, tubes, and tires
- extra parts, such as a drive chain and master links, control levers, cables, and spark plugs
- wire, duct tape, and rope
- extra gasoline

For safety, all refueling should be done at a gas station on the way to the riding area or at your base camp.

What to Take on the Trail

What you take with you during a ride depends on the kind of terrain, how long you expect to ride, how far you might go from your base camp or help, and how experienced you or your companions are in making repairs.

If you decide to take some tools, spare parts, or other supplies on the trail, be sure you can carry them safely and know how to use them. Also, be sure to follow the loading guidelines and weight limit (page 9).

Transporting Your Honda

If you use a truck or motorcycle trailer to transport your Honda, we recommend that you follow these guidelines:

- Use a loading ramp.
- Make sure the fuel valve is off.
- Secure the motorcycle in an upright position, using motorcycle tie-down straps. Avoid using rope, which can loosen and allow the motorcycle to fall over.

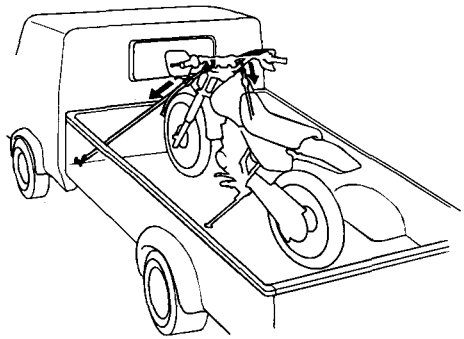

To secure your motorcycle, brace the front wheel against the front of the truck bed or trailer rail. Attach the lower ends of two straps to the tie-down hooks on your vehicle. Attach the upper ends of the straps to the handlebar (one on the right side, the other on the left), close to the fork.

Check that the tie-down straps do not contact any control cables or electrical wiring.

Tighten both straps until the front suspension is compressed about half-way.

Use another tie-down strap to keep the rear of the motorcycle from moving.

We recommend that you do not transport your motorcycle on its side. This can damage the motorcycle, and leaking gasoline could be a hazard.

Storing Your Honda

If you won't be riding for an extended period, such as during the winter, thoroughly inspect your Honda and correct any problem before storing it. That way, needed repairs won't be forgotten and it will be easier to get your motorcycle running again.

To reduce or prevent deterioration that can occur during storage, also follow the following procedures.

Preparation for Storage

1. Change the engine oil (page 62).
2. Fill the fuel tank. Make sure the fuel fill cap is properly installed.
3. Check that the fuel valve is OFF.
4. Drain the carburetor into an approved gasoline container. If storage will last longer than one month, carburetor draining is important, to assure proper performance after storage.

⚠ WARNING

Gasoline is highly flammable and explosive. You can be burned or seriously injured when handling fuel.

- Stop the engine and keep heat, sparks and flame away.
- Handle fuel only outdoors.
- Wipe up spills immediately.

5. Wash and dry your motorcycle.
6. Lubricate the drive chain.
7. Inflate the tires to their recommended pressures (page 94).
8. Store your motorcycle in an unheated area, free of dampness, away from sunlight, with a minimum of daily temperature variation.
9. Cover your motorcycle with a porous material. Avoid using plastic or similar non-breathing, coated materials that restrict air flow and allow heat and moisture to accumulate.

Removal from Storage

1. Uncover and clean your motorcycle.
2. If your motorcycle has been stored for more than four months—change the engine oil (page 62).
3. If your motorcycle has been stored for more than two months—drain and replace the fuel.
4. Lubricate the drive chain.
5. Perform a pre-ride inspection (page 27), then test-ride your motorcycle at low speeds.

You & the Environment

Owning and riding a motorcycle can be enjoyable, but you must do your part to protect nature. When you show respect for the land, wildlife, and other people, you also help preserve the sport of off-road riding.

Following are tips on how you can be an environmentally-responsible motorcycle owner.

- **Tread Lightly.** Stay on existing roads and trails, avoid surfaces that are easily damaged, and ride only in areas approved for off-road vehicles.
- **Keep the Noise Down.** Loud motorcycles can be offensive. Ride as quietly as possible, don't remove your spark arrester, and don't modify the muffler or any other part of your air intake and exhaust systems. Such modifications not only increase noise, they also reduce engine performance and may be illegal.
- **Choose Sensible Cleaners.** Use a biodegradeable detergent when you wash your motorcycle. Avoid aerosol spray cleaners that contain chloroflurocarbons (CFCs) which damage the atmosphere's protective ozone layer. Don't throw cleaning solvents away; see the following guidelines for proper disposal.

- **Recycle Wastes.** It's illegal and thoughtless to put used engine oil in the trash, down a drain, or on the ground. Used oil, gasoline, and cleaning solvents contain poisons that can hurt refuse workers and contaminate our drinking water, lakes, rivers, and oceans. Before changing your oil, make sure you have the proper containers. Put oil and other toxic wastes in separate sealed containers and take them to a recycling center. Call your local or state office of public works or environmental services to find a recycling center in your area and get instructions on how to dispose of non-recyclable wastes.

Taking Care of the Unexpected

With all the challenges you can encounter off-road, there's a chance that sometime something may go wrong. This section gives practical advice to help you deal with a wide range of problems. Take time to read this section before you ride. Also review the tips in *Preparing for a Ride* (page 110).

General Guidelines.....120
If Your Engine Quits or Won't Start.....121
If You Have a Flat Tire.....122
If You Crash.....123
If a Component Fails 124

Taking Care of the Unexpected

General Guidelines

If something goes wrong during a ride, the first thing to do is stop as soon as you safely can. Do not continue riding if you have a flat tire, or you hear an unusual noise, or your motorcycle just doesn't feel right. If you continue riding, you could cause more damage and endanger your own safety.

After a stop, take time to assess the situation. Carefully inspect your motorcycle to identify the problem, then consider your options before you decide what to do.

If a problem is relatively minor and you have the tools, supplies, and skills to make a permanent repair, you may be able to fix it on the trail and continue riding. Or, you may be able to make a temporary repair that allows you to slowly ride back to your base where you can make a permanent repair or get help.

When a problem is more serious—or you don't have the tools, supplies, experience, or time to deal with it—you need to choose the safest way to get yourself and your motorcycle back to base. For example, if you are close enough, you (or you and another person) might be able to push it back.

Whatever the problem, the most important rules are:

- Always put personal safety first.

- If the problem is relatively minor and you have the tools, supplies, and skills to make a temporary repair, be sure to have permanent repairs made as soon as possible.
- Do not continue riding if you are hurt or your motorcycle is not in safe riding condition.

Additional recommendations for specific problems follow.

If Your Engine Quits or Won't Start

If the engine wasn't making any unusual noises before it quit running, and it feels normal when you operate the kickstarter, you can probably rule out a major mechanical problem.

The next area to check is the fuel system:

- Make sure there is enough gas in the tank and the fuel valve is at the ON or RESERVE position.
- Check the fuel fill cap vent tube to see if it is pinched or obstructed.
- Turn the fuel valve OFF, disconnect the fuel line that goes from the fuel valve to the carburetor, then momentarily turn the fuel valve ON. If fuel does not flow out, there is an obstruction in the fuel tank or the fuel valve.

If the fuel system appears to be okay, check the ignition system (this requires a spark plug wrench):

- Check that the spark plug cap isn't loose or disconnected.
- Disconnect the spark plug cap and remove the spark plug. Connect the spark plug cap to the spark plug and ground the threaded portion of the spark plug on the cylinder head.
- Operate the kickstarter while you watch the spark plug. If it sparks, the ignition system is probably working. If there is no spark, install a new spark plug, if you have one with you. If there is still no spark, there is a problem in the ignition system.

If you cannot identify or correct the problem, you will have to push your motorcycle back to your base or get some help.

If You Have a Flat Tire

How you handle a flat tire on the trail depends on how serious the tube or tire damage is, and what tools and supplies you have with you.

If you have a slow leak or a minor puncture, there are two ways to try making a temporary repair:

- Use an aerosol tire sealer to seal the puncture and inflate the tube. (This can be done without removing the tire or wheel.)
- Use a tube patch kit to repair the puncture. (This requires removing the tire.)

If the leak is more serious, or a temporary repair doesn't hold, the tube must be replaced. The tire will also need to be replaced if it is damaged (page 97). Replacing a tube or tire involves removing and re-installing the wheel (pages 90 , 92).

If you are unable to repair a flat tire on the trail, you will need to push the motorcycle back to your base or send for help. We strongly recommend that you do not try to ride with a flat tire. The motorcycle will be hard to handle, and if the tire comes off the rim, it may lock up the wheel and cause you to crash.

If You Crash

Personal safety is your first priority after an accident. If you or anyone else has been injured, take time to assess the severity of the injuries and whether it is safe to continue riding. If you cannot ride safely, send someone for help. Do not ride if you will risk further injury.

If you decide you are capable of riding safely, carefully inspect your motorcycle for damage and determine if it is safe to ride. Check the tightness of critical nuts and bolts securing such parts as the handlebar, control levers, brakes, and wheels.

(cont'd)

If there is minor damage, or you are unsure about possible damage but decide to try riding the motorcycle back to your base, ride slowly and cautiously.

Sometimes, crash damage is hidden or not immediately apparent. When you get home, thoroughly check your motorcycle and correct any problems you find. Also, be sure to have your Honda dealer check the frame and suspension after any serious crash.

If a Component Fails

The drive chain, master link, brake lever or pedal, control cables, and other components can be damaged as you ride in dense brush or over rocky terrain. Making a trailside repair depends on how serious the damage is and what tools and supplies you have with you.

- If the drive chain comes off because the master link clip gets knocked off, you may be able to put the chain back on with a new master link. However, if the chain breaks or does other damage when it comes off, you may not be able to make a trailside repair.

- If any component of the front brake system is damaged, you may be able to ride carefully back to your base using the rear brake for slowing or stopping.
- If you damage a throttle cable or other critical component, your motorcycle may be unsafe to ride. Carefully assess the damage and make any repairs that you can. But if there is any doubt, it's best to be conservative and safe.

Technical Information

This section contains dimensions, capacities, and other technical data, plus information on government requirements and how to break-in your motorcycle.

Vehicle Identification 128
Specifications.....130
Break-in Guidelines 135
High Altitude Carburetor Adjustment.....136
Emission Control Systems.....137
Oxygenated Fuels.....141

Vehicle Identification

Serial Numbers

The frame and engine serial numbers are required when you register your motorcycle. They may also be required when ordering replacement parts. You may record these numbers in the Quick Reference section at the rear of the manual.

The frame number (1) is stamped on the left side of the steering head.

The engine number (2) is stamped on the left side of the engine.

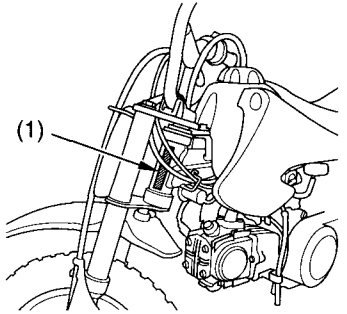

(1) frame number

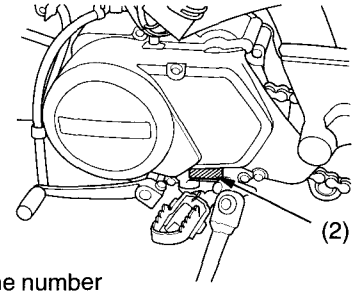

(2) engine number

Color Label & Code

The color label (1) is attached to the left side of the frame down tube.

The color code is helpful when ordering replacement parts. You may record the color and code in the Quick Reference section at the rear of the manual.

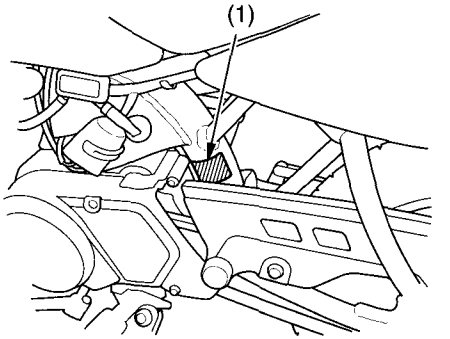

(1) color label

Specifications

Dimensions	
Overall length	51.4 in (1,305 mm)
Overall width	23.0 in (583 mm)
Overall height	30.7 in (780 mm)
Wheelbase	36.0 in (915 mm)

Weight	
Dry weight	104 lbs (47 kg)

Fuel & Lubricants	
Fuel tank capacity	0.79 US gal (3.0 ℓ, 0.66 Imp gal) including reserve
Fuel tank reserve	0.24 US gal (0.9 ℓ, 0.20 Imp gal)
Fuel recommendation	unleaded gasoline, pump octane number of 91 or higher
Air cleaner oil	Pro Honda (USA only) or Honda (Canada only) Foam Filter Oil or an equivalent
Engine oil capacity	after draining: 0.6 US qt (0.6 ℓ, 0.5 Imp qt) after disassembly: 0.8 US qt (0.8 ℓ, 0.7 Imp qt)

Fuel & Lubricants	
Engine oil recommendation	API Service Classification SF or SG, SAE 10W-40, Pro Honda GN4 4-stroke oil (USA & Canada), or Honda 4-stroke oil (Canada only), or an equivalent motorcycle oil (Do not use oil with graphite or molybdenum additives.)
Drive chain lubricant	Pro Honda Chain Lube or an equivalent, or SAE 80 or 90 gear oil

Capacities	
Passenger capacity	operator only; no passenger
Maximum weight capacity	88 lbs (40 kg)
Cargo capacity	none

Engine Specifications	
Displacement	3.0 cu-in (49 cm^3)
Bore & stroke	1.54 × 1.63 in (39.0 × 41.4 mm)
Compression ratio	10.0 : 1

Specifications

Engine Specifications	
Valve clearance (cold)	Intake: 0.002 in (0.05 mm) Exhaust: 0.002 in (0.05 mm)
Spark plug (standard)	CR6HSA (NGK) or U20FSR-U (DENSO)
Spark plug (cold climate; below 5°C, 41°F)	CR5HSA (NGK) or U16FSR-U (DENSO)
Spark plug (extended high speed riding)	CR7HSA (NGK) or U22FSR-U (DENSO)
Spark plug gap	0.024–0.028 in (0.60–0.70 mm)
Idle speed	1,700 ± 100 rpm

Power Transmission	
Primary reduction	4.058
Gear ratio, 1st	3.272
2nd	1.667
3rd	1.190
Final reduction	2.642
Final drive	chain

Power Transmission	
Drive chain freeplay	9/16 – 1 in (15 – 25 mm)
New chain length	38.5 in (978 mm) distance between a span of 77 pins
Used chain service limit length	39.3 in (997 mm) distance between a span of 77 pins

Chassis & Suspension	
Caster	25°30′
Trail	1.4 in (35 mm)
Tire size, front	2.50-10 33J
Tire size, rear	2.50-10 33J
Tire pressure, front (cold)	15 psi (100 kPa , 1.0 kgf/cm²)
Tire pressure, rear (cold)	18 psi (125 kPa , 1.25 kgf/cm²)
Suspension, front	3.79 in (96.3 mm) cushion stroke
	3.4 in (87 mm) axle travel
Suspension, rear	2.8 in (70 mm) axle travel

Specifications

Torque Specifications	
Oil drain bolt	18 lbf·ft (25 N·m , 2.5 kgf·m)
Wheel axles	35 lbf·ft (47 N·m , 4.8 kgf·m)

Break-in Guidelines

Help assure your motorcycle's future reliability and performance by paying extra attention to how you ride during the first operating day or 15 miles (25 km).
During this period, avoid full-throttle starts and rapid acceleration.

High Altitude Carburetor Adjustment

When operating this motorcycle at high altitude, the air-fuel mixture becomes overly rich. Above 6,500 feet (2,000 m), driveability and performance may be reduced and fuel consumption increased. The carburetor can be modified to compensate for this high altitude richness.

However, the carburetor must be returned to standard factory specifications when lower altitude riding is desired. See your Honda dealer for high altitude modification.

NOTICE

Sustained operation at altitudes below 5,000 feet (1,500 m) with high altitude carburetor modifications may cause engine overheating and damage.

Exhaust Emission Requirements
The California Air Resources Board (CARB) requires that your motorcycle comply with applicable exhaust emissions standards during its useful life, when operated and maintained according to the instructions provided. (California only)

Noise Emission Requirements
The EPA also requires that motorcycles built after January 1, 1983 comply with applicable noise emission standards for one year or 1,865 miles (3,000 km) after the time of sale to the ultimate purchaser, when operated and maintained according to the instructions provided. (USA only)

Warranty Compliance
Compliance with the terms of the Distributor's Warranties for Honda Motorcycle Emission Control Systems is necessary in order to keep the emissions system warranty in effect. (USA only)

The Vehicle Emission Control Information Label (1) is attached to the inside of the left fuel tank shroud.

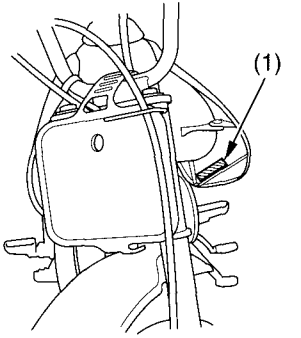

(1) vehicle emission control information label

Emission Control Systems

Source of Emissions

The combustion process produces carbon monoxide and hydrocarbons. Control of hydrocarbons is very important because under certain conditions, they react to form photochemical smog when subjected to sunlight. Carbon monoxide does not react in the same way, but it is toxic.
Honda Motor Co., Ltd. utilizes lean carburetor settings and other systems to reduce carbon monoxide and hydrocarbons.

Exhaust Emission Control System

The exhaust emission control system is composed of lean carburetor settings, and no adjustments should be made except idle speed adjustment with the throttle stop screw.
The exhaust emission control system is separate from the crankcase emission control system.

Crankcase Emission Control System

The engine is equipped with a closed crankcase system to prevent discharging crankcase emissions into the atmosphere.
Blow-by gas is returned to the combustion chamber through the air cleaner and the carburetor.

Noise Emission Control System

TAMPERING WITH THE NOISE CONTROL SYSTEM IS PROHIBITED: Federal law prohibits, or Canadian provincial laws may prohibit the following acts or the causing thereof: (1) The removal or rendering inoperative by any person, other than for purposes of maintenance, repair or replacement, of any device or element of design incorporated into any new vehicle for the purpose of noise control prior to its sale or delivery to the ultimate purchaser or while it is in use; or (2) the use of the vehicle after such device or element of design has been removed or rendered inoperative by any person.

AMONG THOSE ACTS PRESUMED TO CONSTITUTE TAMPERING ARE THE ACTS LISTED BELOW:

1. Removal of, or puncturing the muffler, baffles, header pipes, or any other component which conducts exhaust gases.
2. Removal of, or puncturing of any part of the intake system.
3. Lack of proper maintenance.
4. Replacing any moving parts of the vehicle, or parts of the exhaust or intake system, with parts other than those specified by the manufacturer.

Problems that May Affect Motorcycle Emissions

If you are aware of any of the following symptoms, have the vehicle inspected and repaired by your Honda Motorcycle Dealer:

1. Hard starting or stalling after starting
2. Rough idle
3. Misfiring or backfiring during acceleration
4. After-burning (backfiring)
5. Poor performance (driveability) and poor fuel economy

Oxygenated Fuels

Some conventional gasolines are being blended with alcohol or an ether compound. These gasolines are collectively referred to as oxygenated fuels. To meet clean air standards, some areas of the United States and Canada use oxygenated fuels to help reduce emissions.

If you use an oxygenated fuel, be sure it is unleaded and meets the minimum octane rating requirement.

Before using an oxygenated fuel, try to confirm the fuel's contents. Some states/ provinces require this information to be posted on the pump.

The following are the EPA-approved percentages of oxygenates:

ETHANOL (ethyl or grain alcohol) 10% by Volume
You may use gasoline containing up to 10% ethanol by volume. Gasoline containing ethanol may be marketed under the name ''Gasohol''.

MTBE (Methyl Tertiary Butyl Ether) 15% by Volume
You may use gasoline containing up to 15% MTBE by volume.

METHANOL (methyl or wood alcohol) 5% by Volume
You may use gasoline containing methanol containing up to 5% methanol by volume as long as it contains cosolvents and corrosion inhibitors to protect the fuel system. Gasoline containing more than 5% methanol by volume may cause starting and/or performance problems. It may also damage metal, rubber, and plastic parts of your fuel system.

Oxygenated Fuels

If you notice any undesirable operating symptoms, try another service station or switch to another brand of gasoline.

Fuel system damage or performance problems resulting from the use of an oxygenated fuel containing more than the percentages of oxygenates mentioned above are not covered under warranty.

Oxygenated fuels can damage paint and plastic. Be careful not to spill fuel when filling the fuel tank. Wipe up any spills immediately.

NOTICE

Oxygenated fuels can damage paint and plastic. Damage caused by spilled fuel is not covered under warranty.

Consumer Information

This section contains information on your warranty and how to get an official Honda service manual.

Authorized Manuals.....144
Warranty Coverage.....147
Warranty Service.....148
Contacting Honda.....149
The Honda Rider's Club (USA only).....150
Your Honda Dealer.....151

Authorized Manuals

The Service Manual (Publication Item No. 61GEL01) used by your authorized Honda dealer is available from Helm, Inc. (USA only, Canada: See your Honda dealer to order authorized manuals.)

Also available, but not necessary, to service your model is the Honda Common Service Manual (Publication No. 61CM001), which explains theory of operation and basic service information for various systems common to all Honda motorcycles, motor scooters and ATVs.

These Honda manuals are written for the professional technician, but most mechanically-capable owners should find them easy to use if they have the proper tools and observe proper safety standards. Special Honda tools are necessary for some procedures.

Publication Item No.	Description	Price Each*
61GEL01	2001 XR50R Service Manual	$29.00
61CM001	Common Service Manual	$48.00
31GEL610	2001 XR50R Owner's Manual	$16.00
** Prices are subject to change without notice and without incurring obligation.*		

Order On-Line: www.helminc.com

Order Toll Free: 1-888-CYCLE93 (1-888-292-5393)

(NOTE: For Credit Card Orders Only)

Monday — Friday 8:00 AM — 6:00 PM EST

OR

By completing this form you can order the materials desired. You can pay by check or money order, or change to your credit card. Mail to Helm, Inc. at the address shown on the back of this order form (USA only).

Canada: See your Honda dealer to order authorized manuals.

Publication Item No.	Item Description	Qty.	Price Each*	Total Price
*Prices are subject to change without notice and without incurring obligation.		**Sub Total**		
		Mich. Purchasers Add 6 % Sales Tax		
Orders are mailed within 10 days. Please allow adequate time for delivery.		**Handling Charge**		**$4.00**
		Grand Total		

SHIP TO

NOTE: Dealers and Companies please provide dealer or company name, and also the name of the person to whose attention the shipment should be sent.

Customer Name _____ Attention _____

Street Address - No P. O. Box Number _____ Apartment Number _____

City _____ State _____ Zip Code _____

Daytime Telephone Number ( ) _____

PAYMENT

☐ Check or money order enclosed payable to Helm Inc. U.S. funds only. Do not send cash.

☐ Check here if your billing address is different from the shipping address shown above.

☐ MasterCard

☐ VISA

☐ Discover

Account Number ☐☐☐☐ ☐☐☐☐ ☐☐☐☐ ☐☐☐☐

Expiration: Mo. Yr. ☐ — ☐

Customer Signature _____ Date _____

These Publications cannot be returned for credit without receiving advance authorization within 14 days of delivery. On returns, a restocking fee may be applied against the original order.

HELM P.O. BOX 07280, DETROIT, MICHIGAN 48207

Warranty Coverage

Your new Honda is covered by these warranties:

- Motorcycle Limited Warranty
- Noise Control Warranty (USA only)

There are responsibilities, restrictions, and exclusions which apply to these warranties. Please read the Honda Motorcycle Warranties Booklet given to you by your Honda dealer at the time of purchase. Be sure to keep your Honda owner's card (USA only) with your Warranties Booklet.

It is important to realize that your warranty for your Honda applies to defects in material or factory workmanship. Your warranty coverage does not apply to normal wear or deterioration associated with using the motorcycle.

Your warranty coverage will not be voided if you choose to perform your own maintenance. However, you should have the proper tools and service information and be mechanically qualified. Failures that occur due directly to improper maintenance or lack of maintenance are not covered.

Almost all of your warranty coverage can be extended through the Honda Care Protection Plan (USA only). For more information, see your Honda dealer.

Warranty Service

Please remember that recommended maintenance interval servicing is not included in your warranty coverage. Additionally, your warranty does not apply to the normal wear of items (such as brakes, tires, etc.).

If you believe you have a problem with your Honda, call the service department of your Honda dealer. Make an appointment for an inspection and diagnosis. Remember, as the owner of the motorcycle, you will be asked to authorize that inspection. Your dealer will give you the results of the inspection. If the problem is covered under warranty, your dealer will perform the warranty repairs for you.

If you have questions about warranty coverage or the nature of the repair, it is best to talk to the service manager of your Honda dealer.

Sometimes, in spite of the best intentions of all concerned, a misunderstanding may occur. If you aren't satisfied with your dealer's handling of the situation, we suggest you discuss your problem with the appropriate member of the dealership's management team. If the problem has already been reviewed with the Service Manager, Parts Manager, Sales Manager, etc., contact the Owner of the dealership or his designated representative.

Contacting Honda

Your owner's manual was written to cover most of the questions you might ask about your Honda. Any questions not answered in the owner's manual can be answered by your Honda dealer. If he doesn't have the answer right away, he will get it for you.

If you have a difference of opinion with your dealer, please remember that each dealership is independently owned and operated. That's why it's important to work to resolve any differences at the dealership level.

If you wish to comment on your experiences with your Honda or with your dealer, please send your comments to the following address (USA only):

Motorcycle Division, American Honda Motor Co., Inc., P.O. Box 2220, Torrance, CA 90509-2220, mailstop: 100-4W-5B, telephone: (310) 532-9811.

Canada: Refer to the warranty booklet that was supplied with your vehicle.

Please include the following information in your letter:

- name, address, and telephone number
- product model, year, and frame/VIN serial number
- date of purchase
- dealer name and address

We will likely ask your Honda dealer to respond, or possibly acknowledge your comments directly.

The Honda Rider's Club (USA only)

One of the best ways to get the most enjoyment from owning and riding your Honda is to join the Honda Rider's Club of America. Your purchase of a new motorcycle from a participating Honda dealer entitles you to a complimentary one-year membership. HRCA has hundreds of dealer-sponsored chapters throughout the USA. Your membership benefits include:

- 24-hour emergency roadside assistance.
- 24-hour weather information.
- Emergency message service.
- Motorcycle transport to the nearest Honda dealer or service facility if roadside assistance isn't sufficient.
- Trip interruption protection (prior authorization required).
- Reimbursement assistance for rider training from the Motorcycle Safety Foundation.
- A subscription to *Honda Red Rider,* a magazine full of travel features, product reviews, and event listings.
- Computerized trip routing, color maps, and special travel packages.
- A lost-key retrieval system.
- Motorcycle insurance available through HRCA.
- Exclusive club apparel and accessories, club pins, patches, etc.
- Racing contingency programs and assistance at selected dual-sport, off-road, and motocross events.

For more information, contact your Honda dealer or call 1-800-847-4722.

Your Honda Dealer

Once you purchase your new Honda, get familiar with the organization of your Honda dealer so you can utilize the full range of services available.

The service department is there to perform regular maintenance and unexpected repairs. It has the latest available service information from Honda. The service department will also handle warranty inspections and repairs.

The parts department offers Genuine Honda parts, Pro Honda products, Hondaline accessories (USA only), and Honda accessories and products (Canada only). The same quality that went into your Honda can be found in Genuine Honda replacement parts. You'll also find comparable quality in the accessories and products available from the parts department.

The sales department offers the Honda Care Protection Plan to extend almost all of your warranty coverage (USA only).

Your dealer can inform you about competition and other riding events in your area. You'll also find that your dealer is a source of information (USA only) about American Honda's Rider Education Centers and the Honda Rider's Club of America.

We're sure you'll be as pleased with the service your Honda dealer continues to provide after the sale as you are with the quality and dependability of your Honda.

Table of Contents

The following presents the contents of each section of your owner's manual.

MOTORCYCLE SAFETY 1
Important Safety Information 2
Important Message to Parents 5
Loading, Accessories & Modifications 8
Loading 8
Accessories & Modifications 10
Safety Labels 12

OPERATING CONTROLS 13
Component Locations 14
Fuel Valve 17
Choke Lever 18
Ignition Switch 19
Engine Stop Switch 20
Front Brake Lever 20
Throttle 20
Shift Lever 21
Rear Brake Pedal 21
Kickstarter 21
Side Stand 21

BEFORE RIDING 23
Are You Ready to Ride ? 24
Protective Apparel 24
Is Your Motorcycle Ready to Ride ? 26
Pre-ride Inspection 27

Table of Contents

BASIC OPERATION & RIDING.....29
Safe Riding Precautions.....30
Starting & Stopping the Engine.....32
Preparation.....32
Starting Procedure.....32
Flooded Engine.....34
How to Stop the Engine.....34
Shifting Gears.....35
Braking.....37
Parking.....38
Post-ride Inspection.....39

SERVICING YOUR HONDA.....41
Before You Service Your Honda
The Importance of Maintenance.....43
Maintenance Safety.....45
Important Safety Precautions.....45
Maintenance Schedule.....47
Maintenance Record.....51

Service Preparations
Component Locations.....52
Tools.....54
Seat Removal.....55
Front Fork Protector Removal.....56

(cont'd)

Table of Contents

SERVICING YOUR HONDA (cont'd)
Service Procedures

Fluids & Filters
Fuel 57
Engine Oil 60
Air Cleaner 65

Engine
Throttle 68
Clutch System 71
Valve Clearance 73
Engine Idle Speed 76
Spark Plug 77
Spark Arrester 79

Chassis
Suspension 81
Brakes 84
Wheels 89
Tires & Tubes 94
Side Stand 98
Drive Chain 99

Appearance Care 106

TIPS 109
Preparing for a Ride 110
Transporting Your Honda 112
Storing Your Honda 114
You & the Environment 116

Table of Contents

TAKING CARE OF THE UNEXPECTED 119
General Guidelines 120
If Your Engine Quits or Won't Start 121
If You Have a Flat Tire 122
If You Crash 123
If a Component Fails 124

TECHNICAL INFORMATION 127
Vehicle Identification 128
Specifications 130
Break-in Guidelines 135
High Altitude Carburetor Adjustment 136
Emission Control Systems 137
Oxygenated Fuels 141

CONSUMER INFORMATION 143
Authorized Manuals 144
Warranty Coverage 147
Warranty Service 148
Contacting Honda 149
The Honda Rider's Club (USA only) 150
Your Honda Dealer 151

TABLE OF CONTENTS 152

INDEX 156

QUICK REFERENCE

Index

A

accessories 10
air cleaner 65
air pressure, tires 94
altering your motorcycle 11
arrester, spark 79

B

brakes,
  cable inspection/lubrication 88
  lever, front 20
  pedal, rear 21
  shoe wear 87
braking 37
break-in guidelines 135

C

capacity, fuel 58
carburetor,
  idle speed 76
choke lever 18
cleaner, air 65
cleaning, appearance care 106
clearance, valve 73
clutch system, adjustment 71
color label 129
consumer information 143
controls, operating 13
customer service 149

D

drive chain 99

E

education, rider 3, 151
emission control systems 137
engine number 128
engine,
  flooded 34
  idle speed 76
  pinging 57
  starting 32
  stop switch 20
  stopping 34
  won't start 121
environment, protecting 116

F

filter, air 65
flat tire 122
flooded engine, starting 34
fork 81
frame number 128
front brake,
  lever 20
  lever freeplay 84
front fork protector, removal 56
front suspension 81
front wheel removal 90
fuel,
  recommendation 57
  oxygenated 141
  tank capacity 58
  valve 17

Index

G

gap, spark plug 78
gasohol 141
gasoline 57
gears, shifting 35

H

high altitude carburetor adjustment 136
Honda, contacting 149
Honda service manual 144

I

idle speed, engine 76
inspection,
  post-ride 39
  pre-ride 27

K

kickstarter 21

L

lever,
  front brake 20
  shift 21
limit, weight 9
loading 8

M

maintenance,
record 51
safety 45
schedule 47
manual, service 144
modifications 11

O

oil, engine 60
operating controls 13
over-revving 35
oxygenated fuels 141

P

parking 38
pedal, rear brake 21
pinging, engine 57
plug, spark 77
post-ride inspection 39
pre-ride inspection 27

R

reserve capacity, fuel tank 58
rider training 3, 151
riding,
basic operation 29
before 23
clothing 24
precautions 30
safety 2

Index

S

schedule, maintenance 47
service,
  customer 149
  warranty 148
  manuals 144
shifting gears 35
shoe, brake 87
side stand 21, 98
spark arrester 79
spark knock 57
spark plug 77
specifications 130
stand, side 21, 98
starting, engine 32
stop switch, engine 20
stopping engine 34
storage 114
suspension,
  front 81
  rear 82

T

throttle
  freeplay 68
  limiter 31, 70
  operation 20
tires,
  air pressure 94
  flat 122
  replacing 97
tools 54
towing 36
training, rider 3, 151
transporting 112
troubleshooting, starting 121

U

unexpected problems 119

V

valve, fuel.....17
vehicle identification 128

W

warranty,
coverage 147
extended 147
service 148
washing your motorcycle.....107
weight limit 9
wheels.....89

Quick Reference

The following is a brief, but important collection of information you need to know about your Honda. You'll also find space to record important notes.

How To Avoid Costly Repairs

The engine of your Honda can be the most expensive component to repair. Proper maintenance, especially the use of the recommended fluids and filters, prevents premature wear and damage.

Frequent causes of costly engine repairs are:

- Engine oil: insufficient quantity, improper oil.
- Air cleaner: dirty, leaking because of improper installation (poor seal).

Quick Reference

Record important information here:

Frame No.	
Engine No.	
Color Label	
Owner's:	
Name	
Address	
City/State	
Phone	
Dealer's:	
Name	
Address	
City/State	
Phone	
Service Mgr.	

Quick Reference

Initial Maintenance	about 100 miles (150 km) or one month.
Regular Maintenance	about every 600 miles (1,000 km) or six months.
Pre-ride Inspection	Check the following items each time before you ride (page 27): tires, rims, leaks, engine oil, fuel, drive chain, cables, nuts & bolts, throttle, and brakes.
Fuel/Capacity	unleaded gasoline, pump octane number of 91 or higher tank: 0.79 US gal (3.0 ℓ , 0.66 Imp gal) reserve: 0.24 US gal (0.9 ℓ , 0.20 Imp gal)
Engine Oil	API Service Classification SF or SG; SAE 10W-40
Maximum Weight Capacity	88 lbs (40 kg) rider only (no passenger or cargo) and any accessories
Tires	Front: 2.50-10 33J , Rear: 2.50-10 33J
Tire Pressure (cold)	Front: 15 psi (100 kPa , 1.0 kgf/cm^2) Rear: 18 psi (125 kPa , 1.25 kgf/cm^2)
Spark Plug	CR6HSA (NGK) or U20FSR-U (DENSO)

HONDA MOTOR CO., LTD.

31GEL610
00X31-GEL-6100

㊥ Ⓞ (HC) 4000.2000.06.1
PRINTED IN JAPAN