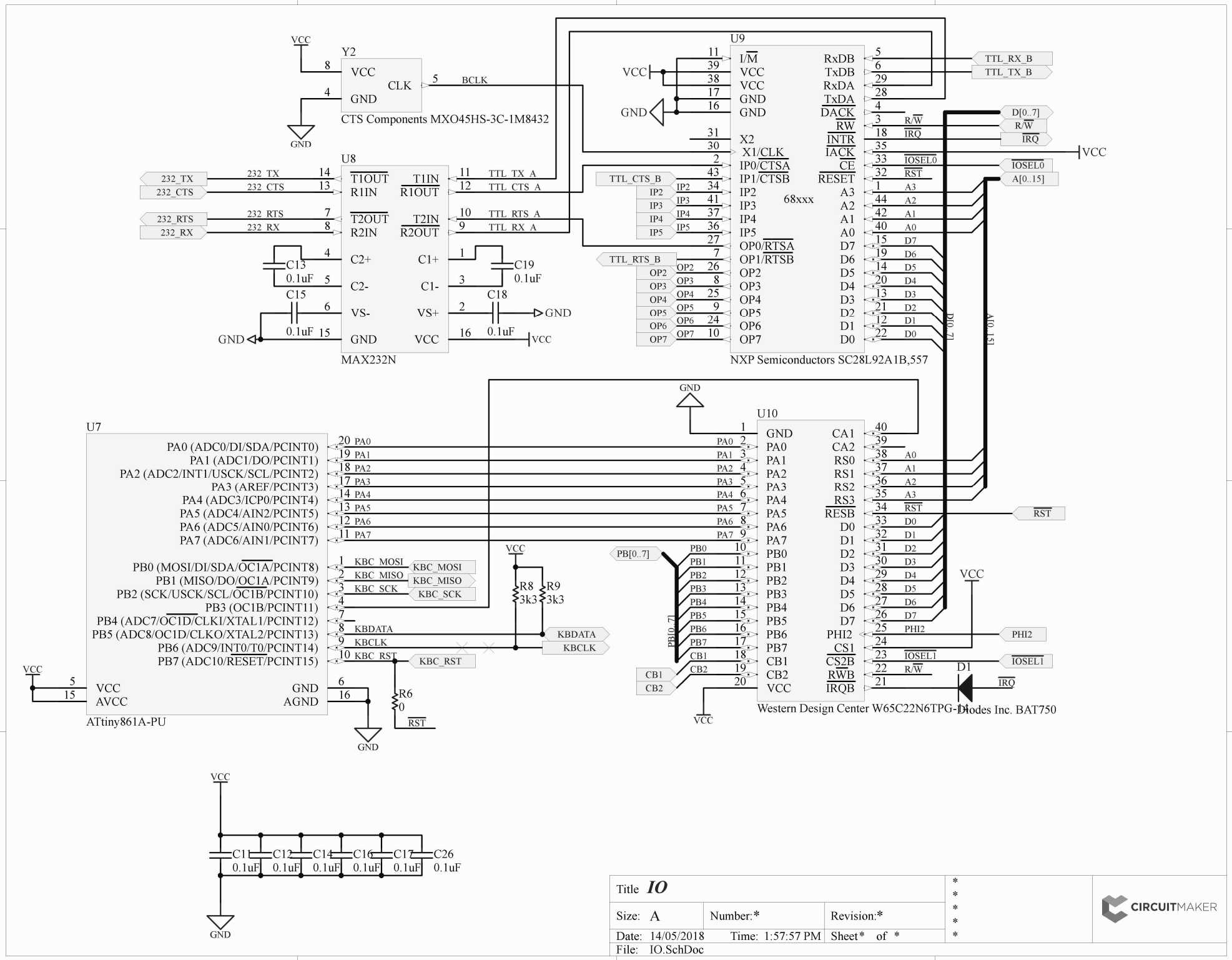
Y2
VCC
GND
CLK
BCLK
CTS Components MXO45HS-3C-1M8432
U8
T1OUT
R1IN
T2OUT
R2IN
C2+
C2-
VS-
GND
T1IN
R1OUT
T2IN
R2OUT
C1+
C1-
VS+
VCC
MAX232N
232_TX
232_CTS
232_RTS
232_RX
TTL_TX_A
TTL_CTS_A
TTL_RTS_A
TTL_RX_A
C13 0.1uF
C15 0.1uF
C19 0.1uF
C18 0.1uF
U9
I/M
X2
X1/CLK
IP0/CTSA
IP1/CTSB
OP0/RTSA
OP1/RTSB
68xxx
RxDB
TxDB
RxDA
TxDA
DACK
RW
INTR
IACK
CE
RESET
NXP Semiconductors SC28L92A1B,557
TTL_RX_B
TTL_TX_B
TTL_CTS_B
TTL_RTS_B
D[0..7]
R/W
IRQ
IOSEL0
RST
A[0..15]
D[0..7]
A[0..15]
U7
PA0 (ADC0/DI/SDA/PCINT0)
PA1 (ADC1/DO/PCINT1)
PA2 (ADC2/INT1/USCK/SCL/PCINT2)
PA3 (AREF/PCINT3)
PA4 (ADC3/ICP0/PCINT4)
PA5 (ADC4/AIN2/PCINT5)
PA6 (ADC5/AIN0/PCINT6)
PA7 (ADC6/AIN1/PCINT7)
PB0 (MOSI/DI/SDA/OC1A/PCINT8)
PB1 (MISO/DO/OC1A/PCINT9)
PB2 (SCK/USCK/SCL/OC1B/PCINT10)
PB3 (OC1B/PCINT11)
PB4 (ADC7/OC1D/CLKI/XTAL1/PCINT12)
PB5 (ADC8/OC1D/CLKO/XTAL2/PCINT13)
PB6 (ADC9/INT0/T0/PCINT14)
PB7 (ADC10/RESET/PCINT15)
VCC
AVCC
GND
AGND
ATtiny861A-PU
KBC_MOSI
KBC_MISO
KBC_SCK
KBDATA
KBCLK
KBC_RST
R8 3k3
R9 3k3
R6 0
U10
GND
PA0
PA1
PA2
PA3
PA4
PA5
PA6
PA7
PB0
PB1
PB2
PB3
PB4
PB5
PB6
PB7
CB1
CB2
VCC
CA1
CA2
RS0
RS1
RS2
RS3
RESB
D0
D1
D2
D3
D4
D5
D6
D7
PHI2
CS1
CS2B
RWB
IRQB
Western Design Center W65C22N6TPG-14
PB[0..7]
D1
Diodes Inc. BAT750
C11 0.1uF
C12 0.1uF
C14 0.1uF
C16 0.1uF
C17 0.1uF
C26 0.1uF
Title IO
Size: A
Number:*
Revision:*
Date: 14/05/2018
Time: 1:57:57 PM
Sheet* of *
File: IO.SchDoc
CIRCUITMAKER