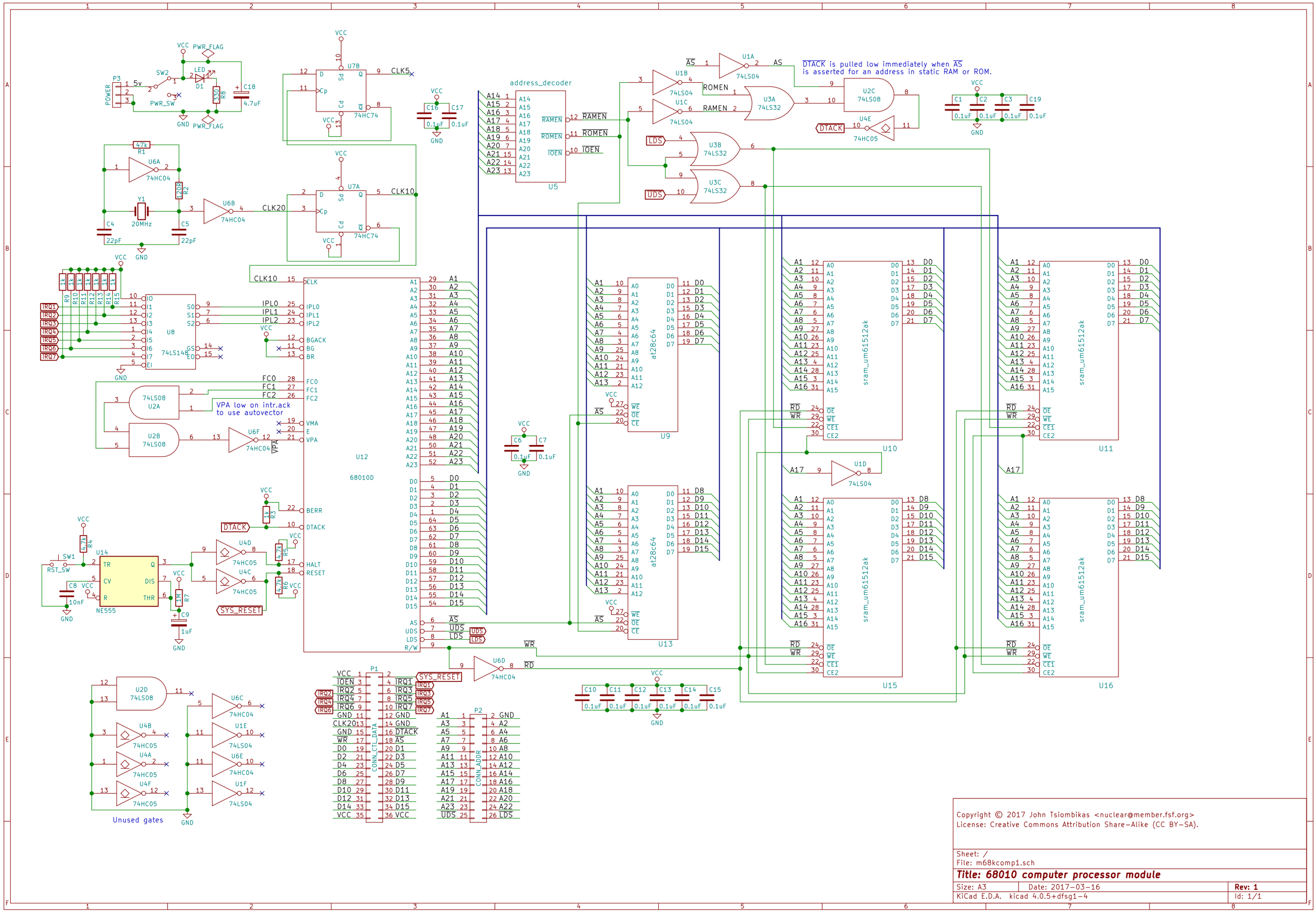
DTACK is pulled low immediately when AS is asserted for an address in static RAM or ROM.
VPA low on intr.ack to use autovector
Unused gates
68010D
U12
U5
address_decoder
U9
U13
U10
U11
U15
U16
U8
74LS148
NE555
U14
P1
P2
CONN_CTL_DATA
CONN_ADDR
at28c64
sram_um61512ak
Copyright © 2017 John Tsiombikas <nuclear@member.fsf.org>
License: Creative Commons Attribution Share-Alike (CC BY-SA).
Sheet: /
File: m68kcomp1.sch
Title: 68010 computer processor module
Size: A3
Date: 2017-03-16
Rev: 1
KiCad E.D.A. kicad 4.0.5+dfsg1-4
Id: 1/1