F13 can be held LOW with normal boot ROM, which allows JTAG access if JTAG is disabled by code.
-->Be sure to pull pin F13 high

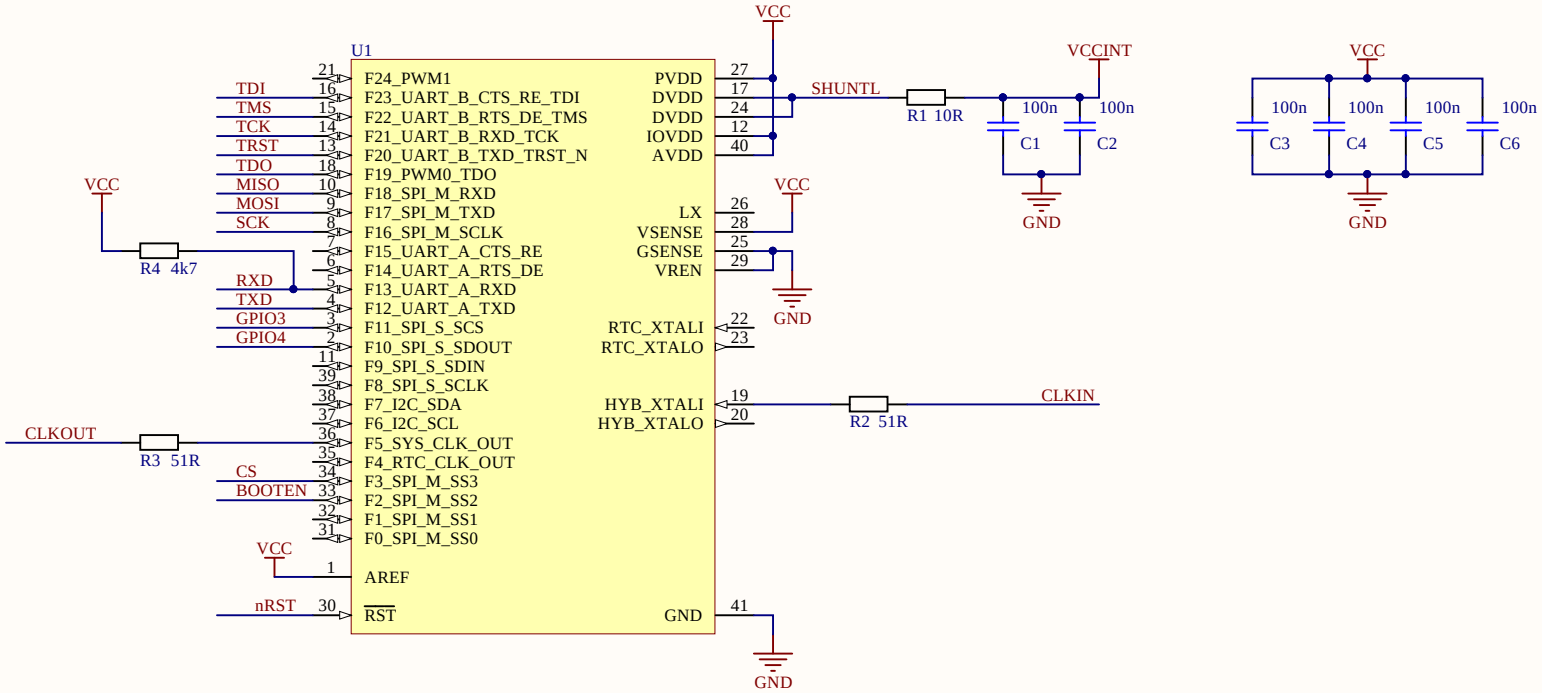

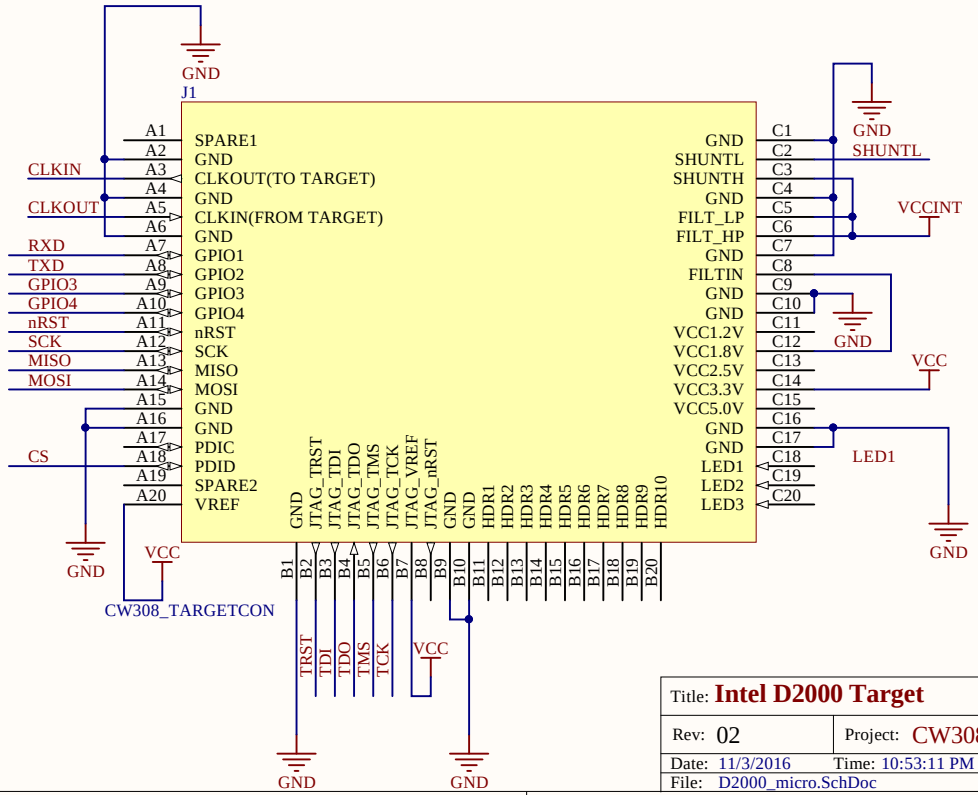

Title: **Intel D2000 Target**		Approved: YES	NewAE Technology
Rev: 02	Project: CW308T-D2000	License: GPL	
Date: 11/3/2016	Time: 10:53:11 PM	Sheet of	Copyright © NewAE Technology Inc. NewAE.com
File: D2000_micro.SchDoc			