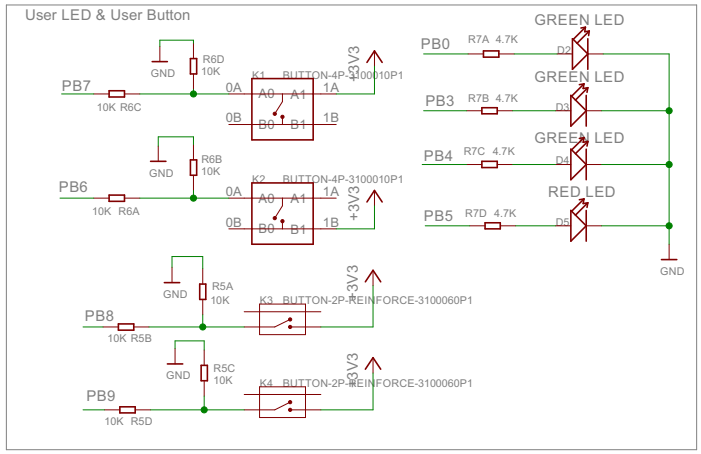

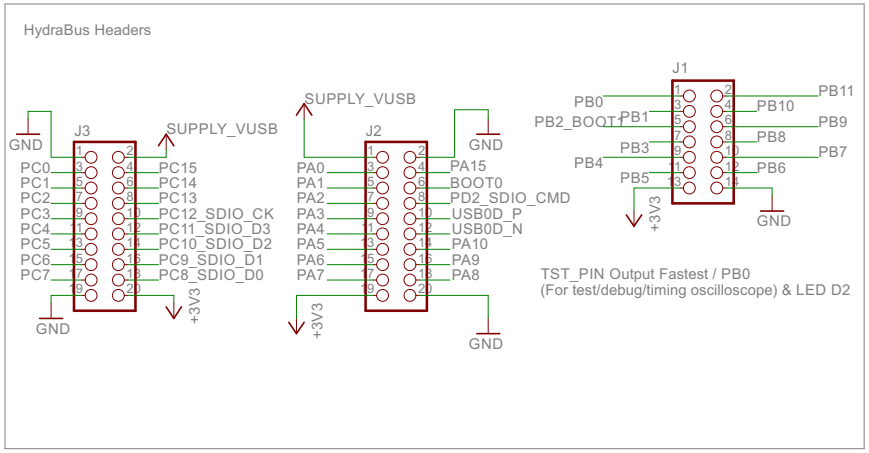
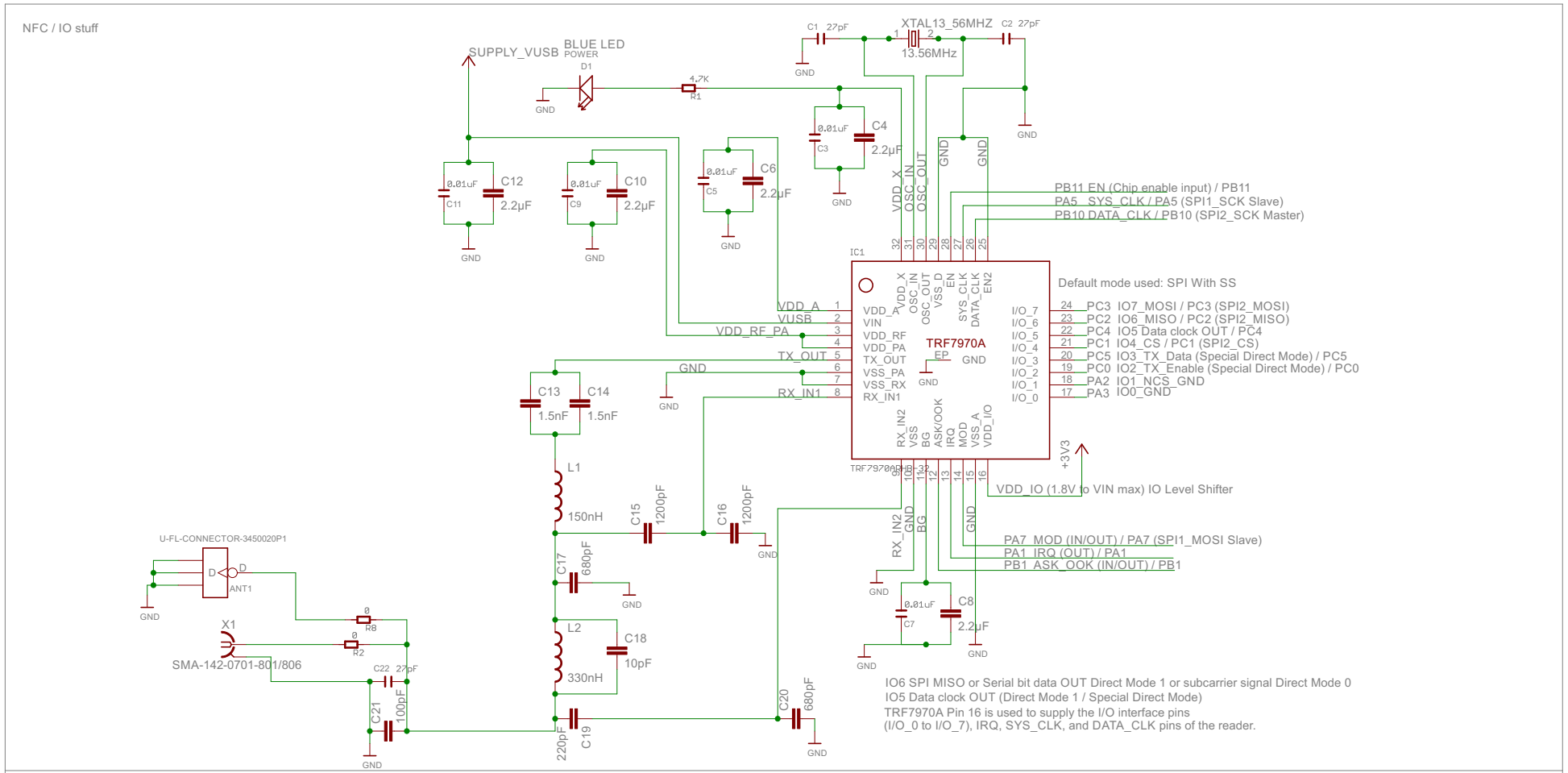
HydraNFC Shield (C) Benjamin VERNOUX
http://hydrabus.com