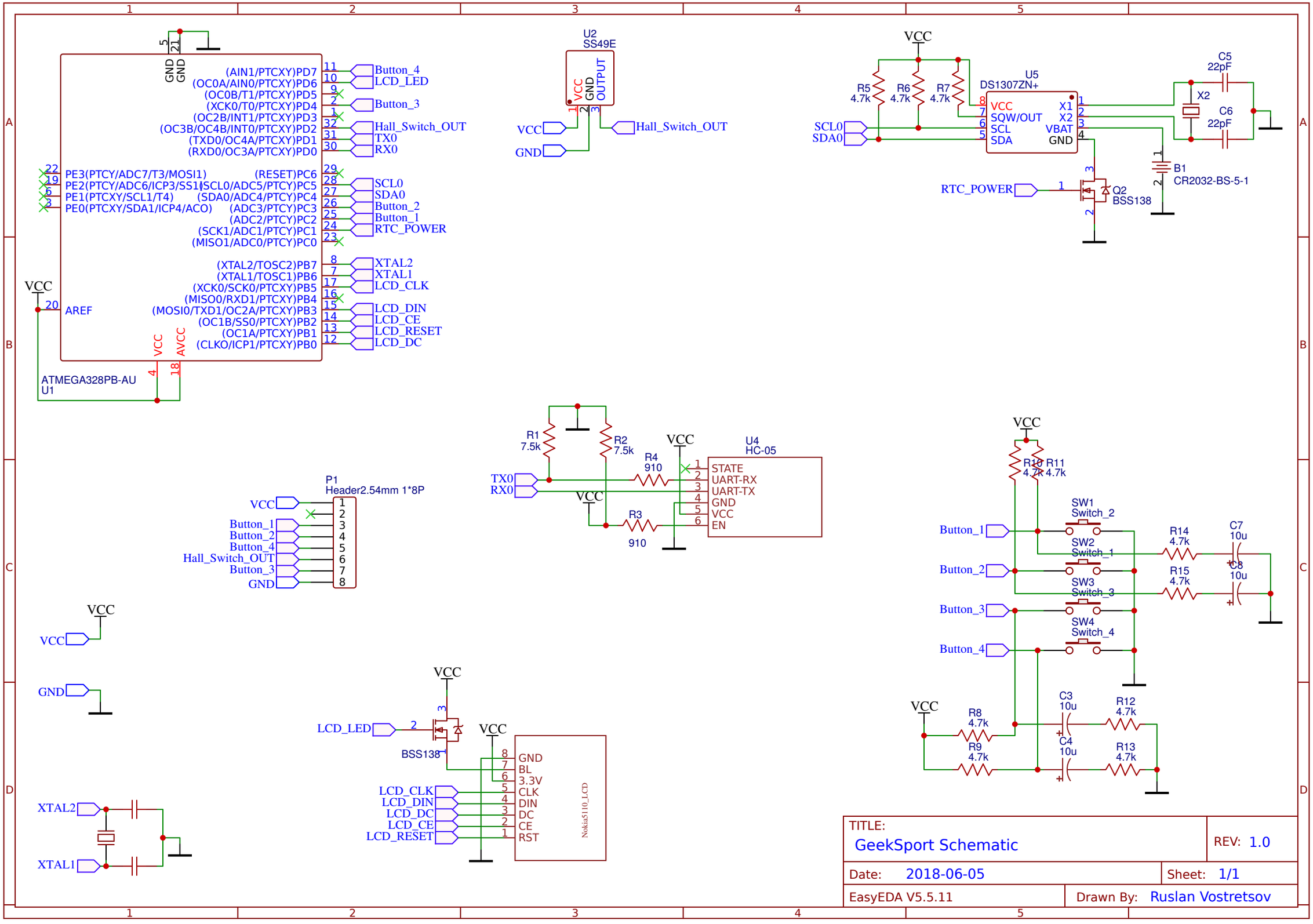
ATMEGA328PB-AU
U1
GND
GND
(AIN1/PTCXY)PD7
(OC0A/AIN0/PTCXY)PD6
(OC0B/T1/PTCXY)PD5
(XCK0/T0/PTCXY)PD4
(OC2B/INT1/PTCXY)PD3
(OC3B/OC4B/INT0/PTCXY)PD2
(TXD0/OC4A/PTCXY)PD1
(RXD0/OC3A/PTCXY)PD0
PE3(PTCY/ADC7/T3/MOSI1)
PE2(PTCY/ADC6/ICP3/SS1)
PE1(PTCXY/SCL1/T4)
PE0(PTCXY/SDA1/ICP4/ACO)
(RESET)PC6
(SCL0/ADC5/PTCY)PC5
(SDA0/ADC4/PTCY)PC4
(ADC3/PTCY)PC3
(ADC2/PTCY)PC2
(SCK1/ADC1/PTCY)PC1
(MISO1/ADC0/PTCY)PC0
(XTAL2/TOSC2)PB7
(XTAL1/TOSC1)PB6
(XCK0/SCK0/PTCXY)PB5
(MISO0/RXD1/PTCXY)PB4
(MOSI0/TXD1/OC2A/PTCXY)PB3
(OC1B/SS0/PTCXY)PB2
(OC1A/PTCXY)PB1
(CLKO/ICP1/PTCXY)PB0
AREF
VCC
AVCC
VCC
Button_4
LCD_LED
Button_3
Hall_Switch_OUT
TX0
RX0
SCL0
SDA0
Button_2
Button_1
RTC_POWER
XTAL2
XTAL1
LCD_CLK
LCD_DIN
LCD_CE
LCD_RESET
LCD_DC
U2
SS49E
VCC
GND
OUTPUT
VCC
GND
Hall_Switch_OUT
VCC
R5
4.7k
R6
4.7k
R7
4.7k
U5
DS1307ZN+
VCC
SQW/OUT
SCL
SDA
X1
X2
VBAT
GND
SCL0
SDA0
C5
22pF
X2
C6
22pF
B1
CR2032-BS-5-1
RTC_POWER
Q2
BSS138
R1
7.5k
R2
7.5k
VCC
R4
910
U4
HC-05
TX0
RX0
STATE
UART-RX
UART-TX
GND
VCC
EN
VCC
R3
910
P1
Header2.54mm 1*8P
VCC
Button_1
Button_2
Button_4
Hall_Switch_OUT
Button_3
GND
VCC
R10
4.7k
R11
4.7k
SW1
Switch_2
SW2
Switch_1
SW3
Switch_3
SW4
Switch_4
Button_1
Button_2
Button_3
Button_4
R14
4.7k
R15
4.7k
C7
10u
C8
10u
VCC
VCC
GND
VCC
LCD_LED
BSS138
VCC
GND
BL
3.3V
CLK
DIN
DC
CE
RST
Nokia5110_LCD
LCD_CLK
LCD_DIN
LCD_DC
LCD_CE
LCD_RESET
VCC
R8
4.7k
R9
4.7k
C3
10u
C4
10u
R12
4.7k
R13
4.7k
XTAL2
XTAL1
TITLE:
GeekSport Schematic
REV: 1.0
Date: 2018-06-05
Sheet: 1/1
EasyEDA V5.5.11
Drawn By: Ruslan Vostretsov