Copyright Mathieu Stephan, 2013

This documentation describes Open Hardware and is licensed under the CERN OHL v. 1.2.

You may redistribute and modify this documentation under the terms of the CERN OHL v.1.2. (http://ohwr.org/cernohl). This documentation is distributed WITHOUT ANY EXPRESS OR IMPLIED WARRANTY, INCLUDING OF MERCHANTABILITY, SATISFACTORY QUALITY AND FITNESS FOR A PARTICULAR PURPOSE.
Please see the CERN OHL v.1.2 for applicable conditions

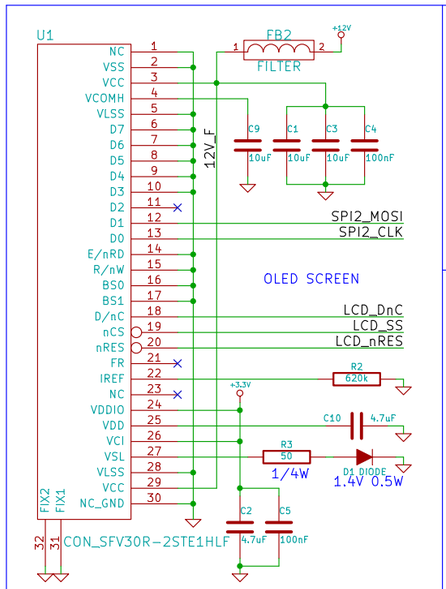

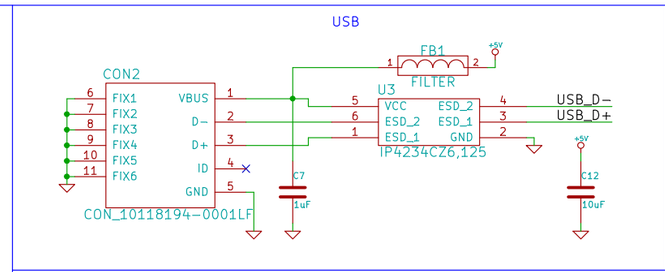

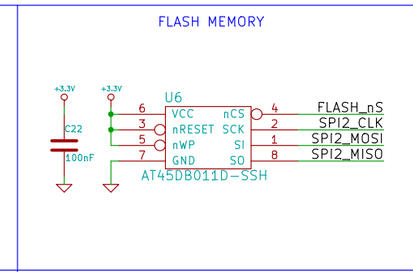

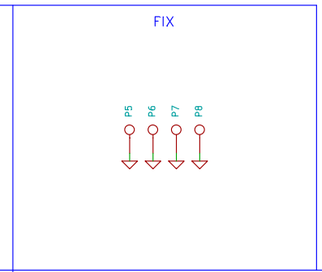

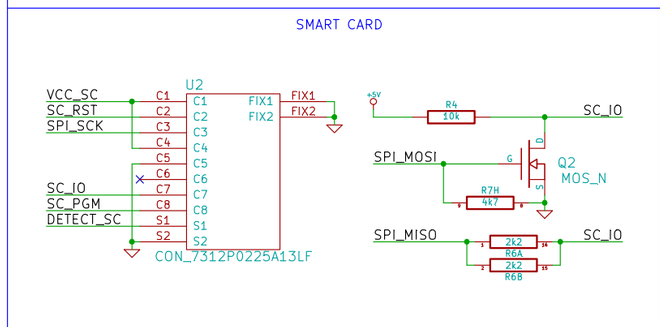

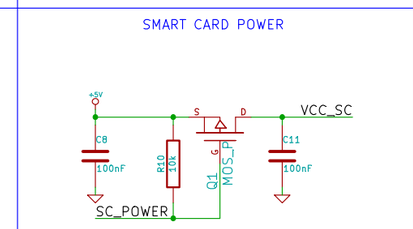

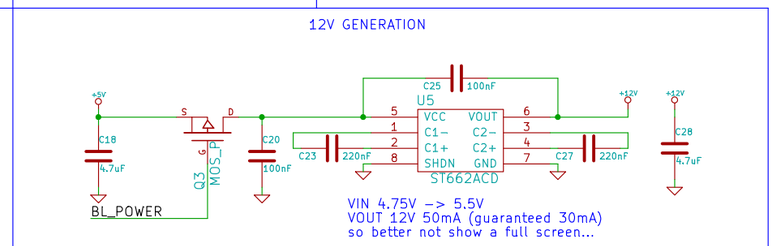

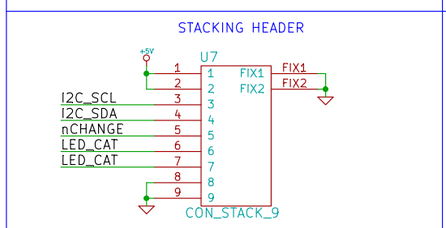

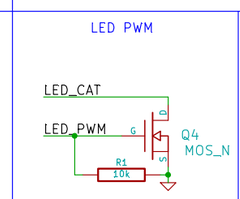

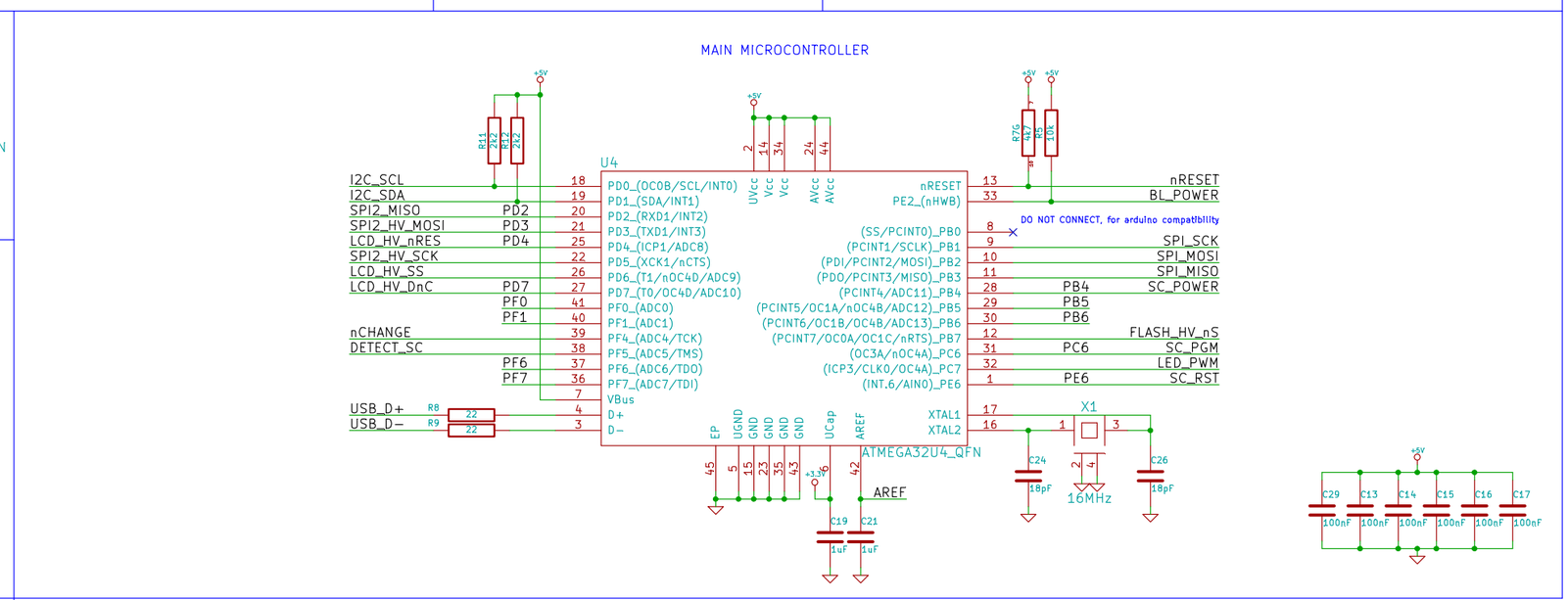

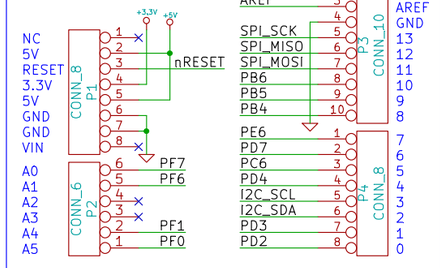

Differences with official Leonardo pinout:

- A2 removed (PF5)
- A3 removed (PF4)
- D13 switched to SCK
- D12 switched to MISO
- D11 switched to MOSI

Supported shields:
- Seeed BT (D0 -> D7)
- Ada PN532 (SCL/SDA)
- Ada PN532 (4 Dx pins)

Not supported:
- Bluefruit EZ (D0 & D1)
- Wifly shield

to check:
- Seeed NFC v2
- Arduino WIFI
- Ada CC3000

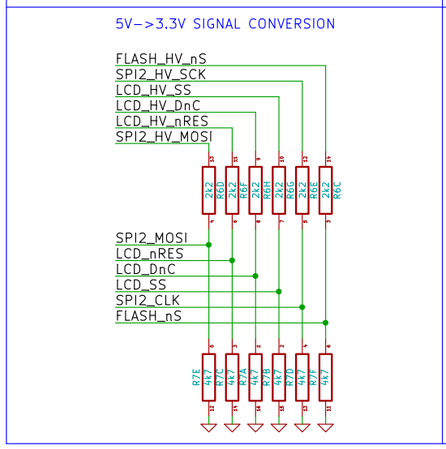

Max. power consumptions

- LED:
- SMC: 5mA
- MCU: 15mA
- OLED: 130mA
- TOUCH: 1mA
- FLASH: 20mA
- RES NET: 7mA

TOTAL: 178mA

File: mooltipass.sch		
Sheet: /		
Title: M. Stephan - Offline Password Keeper Schematics (Licensed under CERN OHL V1.2)		
Size: A3	Date: 12 apr 2014	**Rev: 2**
KiCad E.D.A. eeschema (2013-07-07 BZR 4022)-stable		Id: 1/1