FM Modulation using Wien Bridge Oscillator & 555 Timer

Group: 21

Name : Raunak Kumar (23116082) & Anuj (23116015)

Institution: Indian Institute of Technology Roorkee

Year: 2024

Objective:

• Design and implement a Wien bridge oscillator for generating sinusoidal signals.
• Amplify the output signal for stable frequency modulation.
• Implement frequency modulation using a 555 timer IC to modulate the output signal.

Apparatus Required:

Wien Bridge Oscillator Components:
- Operational Amplifier (e.g.,IC 741)
- Resistors (10kΩ,1.5kΩ,22kΩ)
- Capacitors (0.1μF)

FM Modulator:
- 555 Timer IC
- Resistors and capacitors for configuring the 555 timer in an astable mode
- Coupling and bypass capacitor

- IN 4148 diode

- Resistors (610kΩ,220kΩ)
- Capacitors (10 pF)

Theory:

The Wien bridge oscillator is a type of RC oscillator that produces a stable sine wave. It uses a bridge circuit composed of resistors and capacitors as the feedback network for sustained oscillations. The oscillator relies on the balance condition of the bridge circuit and the positive feedback mechanism through an amplifier to maintain stable oscillation.

In this implementation, the output of the Wien bridge oscillator serves as the carrier signal for frequency modulation (FM). The 555 timer IC is used in an astable configuration to perform frequency modulation. The modulation signal varies the timing components of the er, thus altering the output frequency proportionally to the input signal.

Working:

Wien Bridge Oscillator

Oscillator Setup:

- The Wien bridge oscillator is configured with resistors and capacitors to generate a sinusoidal output signal. Positive feedback ensures sustained oscillations.
- The oscillation frequency is determined by the RC network and can be adjusted using appropriate components.

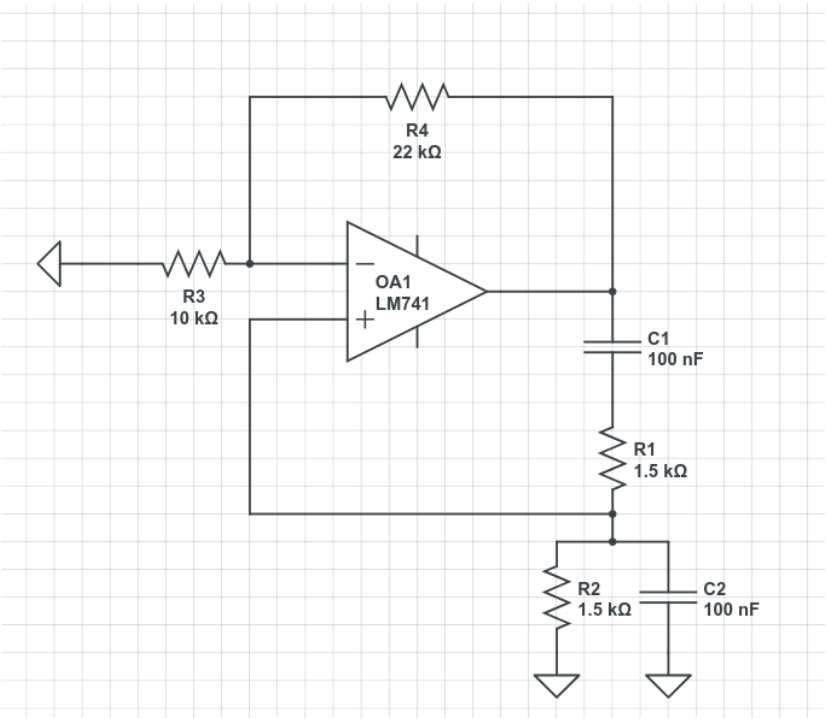

Working of Wien's Bridge:

The Wien Bridge oscillator is a two-stage RC coupled amplifier circuit that has good stability at its resonant frequency, low distortion and is very easy to tune making it a popular circuit as an audio frequency oscillator.

The op-amp(IC 741) used in this oscillator circuit is working as a non-inverting amplifier mode.

The Wien Bridge Oscillator uses a feedback circuit consisting of a series RC circuit connected with a parallel RC of the same component values producing a phase delay or phase advance circuit depending upon the frequency.

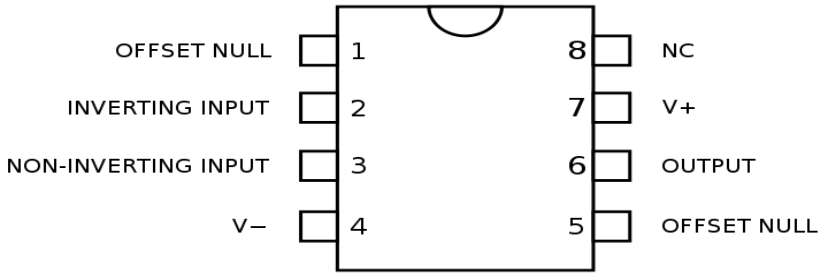

IC 741

-

The IC 741 operational amplifier looks like a small chip. The representation of 741 IC op-amp is given above which comprises eight pins. The most significant pins are 2,3 and 6, where pins 2 and 3 denote inverting & non-inverting terminals, and pin 6 denotes output voltage. The triangular form in the IC signifies an op-amp integrated circuit.

- The power is supplied through port 7 and 4
- The output waveform is taken at port 6

IC 741 has many applications including :

- **Mathematical operations**: The IC 741 can perform mathematical operations like addition, subtraction, multiplication, division, differentiation, and integration.
- **Comparator**: The IC 741 can compare small differential voltages and generate an output, making it useful in automated systems.
- **Inverting and non-inverting amplifier**: The IC 741 can be used as an inverting or non-inverting amplifier.
- **Voltage to current converter**: The IC 741 can be used as a voltage to current converter.
- **Amplifier**: The IC 741 can be used as an amplifier.

In a Wien bridge oscillator circuit, the IC 741 operational amplifier (op-amp) plays a critical role as the amplifying component (giving the required gain for sustained oscillations).

RC Phase Shift Network

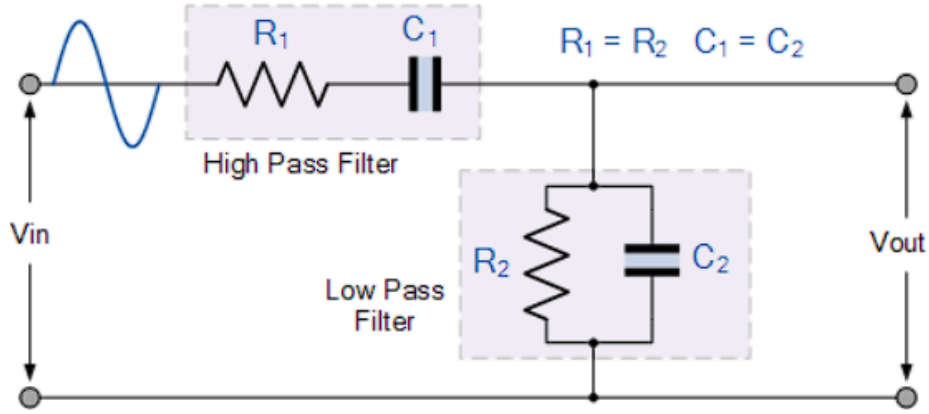

For a linear circuit to oscillate, it must meet the Barkhausen conditions: its loop gain must be one and the phase around the loop must be an integer multiple of 360 degrees.

At low frequencies the reactance of the series capacitor (C1) is very high so acts a bit like an open circuit, blocking any input signal at Vin resulting in virtually no output signal, Vout.

Likewise, at high frequencies, the reactance of the parallel capacitor, (C2) becomes very low, so this parallel connected capacitor acts a bit like a short circuit across the output, so again there is no output signal.

So there must be a frequency point between these two extremes of C1 being open-circuited and C2 being short-circuited where the output voltage Vout reaches its maximum value.

The frequency value of the input waveform at which this happens is called the oscillators *Resonant Frequency*, $(f\mathrm{r})$

Calculations:

- This is the general wien bridge circuit which is designed to generate sine waves.
- For stable oscillations $R4/R3 > 2$ (from the figure above)

  Calculating the frequency of the sine wave generated:

$$f = \frac{1}{2\pi\sqrt{R_1 C_1 R_2 C_2}}$$

If $R_1 = R_2$ and $C_1 = C_2 = C$

Then,

$$f = \frac{1}{2\pi RC}$$

$f \simeq 1.6\ kHz$ (R=1. 5$k\Omega$, C=10pF)

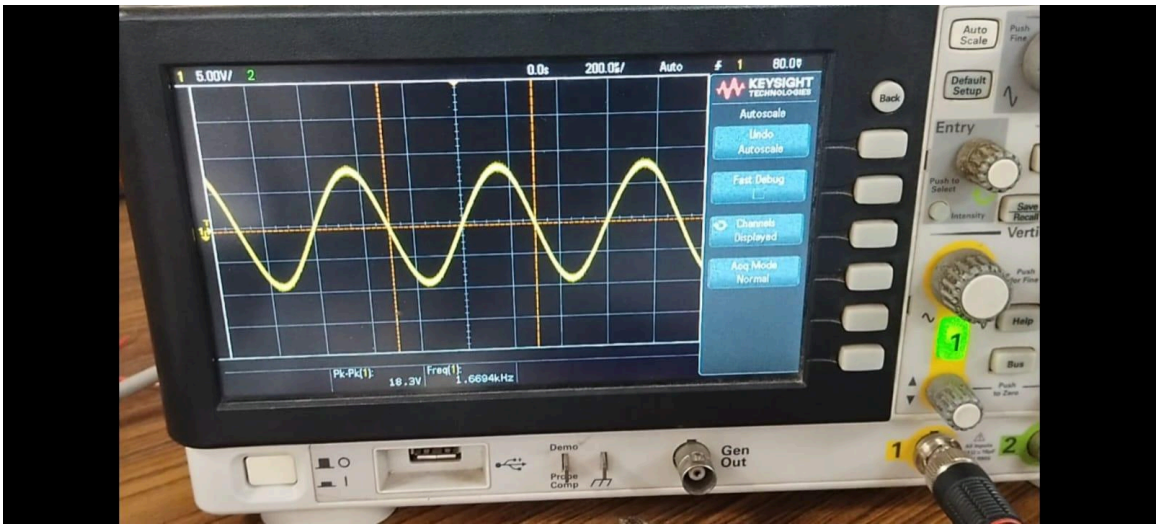

The sine wave generated by our circuit

Initial Ideas:

After designing our Wien's bridge Oscillator , we now needed to do fm modulation using the signal generated by the Wiens bridge as our carrier signal .

To make this possible we got back to our class notes of fm demodulation.

Now to do the fm modulation that is feasible with the circuit is designed by using a varactor/varicap in a place of capacitor and passing the message signal in series with the varactor.

Here is the attached photo of the blueprint of our circuit design.

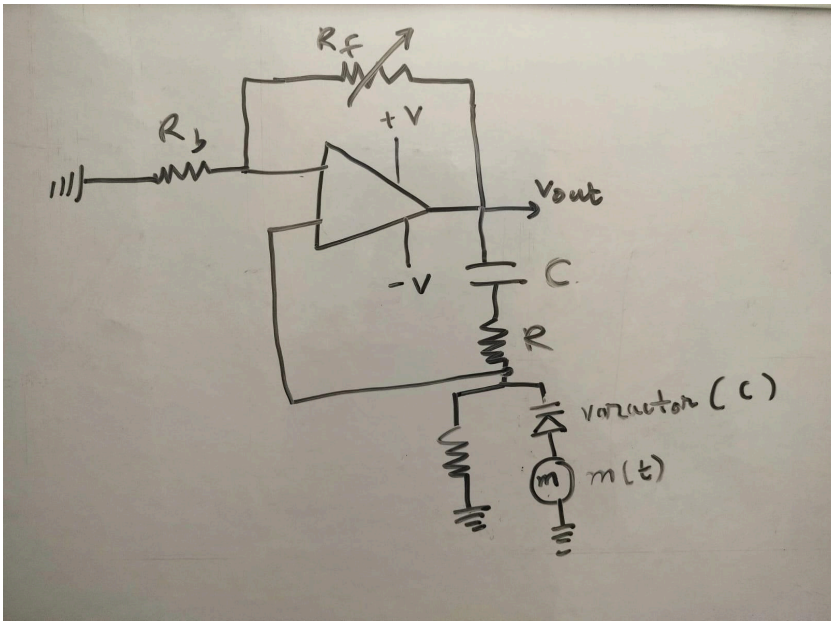

If it looks quite simple , because it is.

and it does perform fm modulation theoretically as we were not to design this circuit in the lab because of the varactor unavailability.

here in the Wien's bridge oscillator the frequency of the circuit is given by $1/\sqrt{2\pi R1R2C1C2}$

Now placing a varactor in place of C2 we can get the dependency of frequency of the output on the message signal.

$$C = C_0 - KV_i(t)$$

Now frequency of the output signal can be written as

$$\frac{1}{2\pi\sqrt{R_1R_2C_1(C_0 - KV_i(t))}}$$

$$\frac{1}{2\pi\sqrt{R_1R_2C_1C_0}}\left(1 - \frac{KV_i(t)}{C_0}\right)^{-\frac{1}{2}}$$

If $\frac{KV_i(t)}{C_0} \ll 1$, then:

$$\frac{1}{2\pi\sqrt{R_1R_2C_1C_0}}\left(1+\frac{KV_i(t)}{C_0}\right)$$

$$\frac{1}{2\pi\sqrt{R_1R_2C_1C_0}}+\frac{KV_i(t)}{2\pi\sqrt{R_1R_2C_1C_0}}$$

The frequency of the output changes with our message signal.

Now since the circuit is not realizable in the lab we moved to a different approach of doing the modulation with the Wien's bridge.

Issues faced:

Components unavailability : there were many components which were not available or were not of exact value. We solved this by using various combinations of components already available to get our desired resistance and capacitance.

Amplitude adjustment - though we were able to control the frequency using R and C values we faced the problem of adjusting the amplitude which resulted in distorted fm. We solved this by adding a resistance to the output of the oscillator which reduced the amplitude of the sine wave.

FM Modulation with 555 Timer IC:

Now we have generated a sine wave using the wien bridge oscillator and we have to frequency modulate it.

555 IC :

- The 555 timer IC is configured in an astable mode, producing a continuous output waveform (square wave) whose frequency is modulated by the input signal.
- The modulating signal changes the charging and discharging times of the 555 timer, thereby varying the output frequency.
- The modulated output from the 555 timer represents the FM signal.

Applications of 555 timer:

1. Clock pulse generators
2. Timer circuits, debounce circuits for switches, and touch sensor circuits.
3. Pulse Width Modulation (Motor speed control, light dimmers) .
4. Voltage controlled Oscillator (VCO).

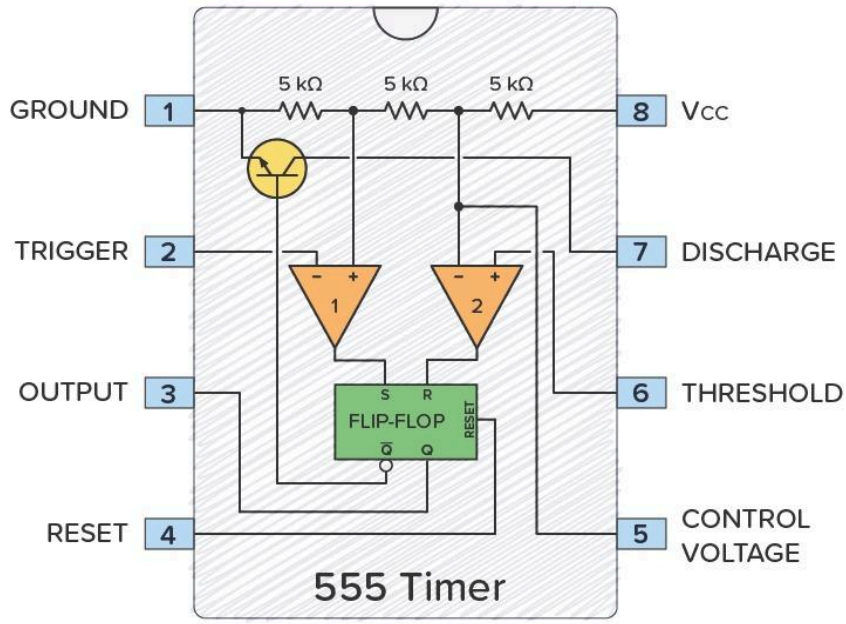

The duty cycle in a 555 timer circuit refers to the percentage of time the output signal is in the *high* (or *on*) state within one complete cycle of the waveform. It is a measure of how long the output stays high relative to the total period of the output signal.

$$D = \frac{R_1 + R_2}{R_1 + 2R_2} \times 100\%$$

Modulation Circuit:

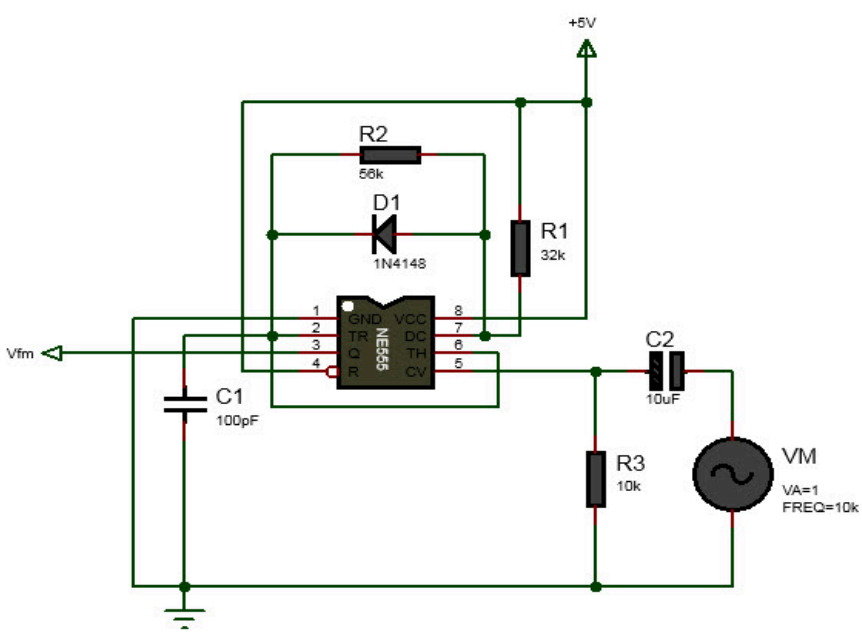

Note: the value of resistance and capacitance is different and has been shown in the below image.

The frequency f of a circuit is defined by:

$$f = \frac{1.44}{(R_1 + 2R_2)C_1}$$

- R_1 and R_2 are resistances in ohms (Ω).
- C_1 is the capacitance in farads (F).
- f is the desired frequency, here specified as 100 kHz (100,000 Hz).

High and Low Time Equations:

The time for the high (T_H) and low (T_L) phases of the square wave are given by:

$$T_H = 0.693(R_1 + R_2)C_1$$

$$T_L = 0.693R_2C_1$$

1) Calculate Frequency, Duty Cycle, Charging and Discharging Time:

Inputs:

R1: 220 KΩ

R2: 610 KΩ

C: 10 pF

Reset Calculate

Outputs:

Frequency,f: 100.00KHz

Duty Cycle: 57.64 %

Charging Time(High),TH: 5.75 µs

Discharging Time(Low)),TL: 4.23 µs

These are the values of resistance and capacitance used.

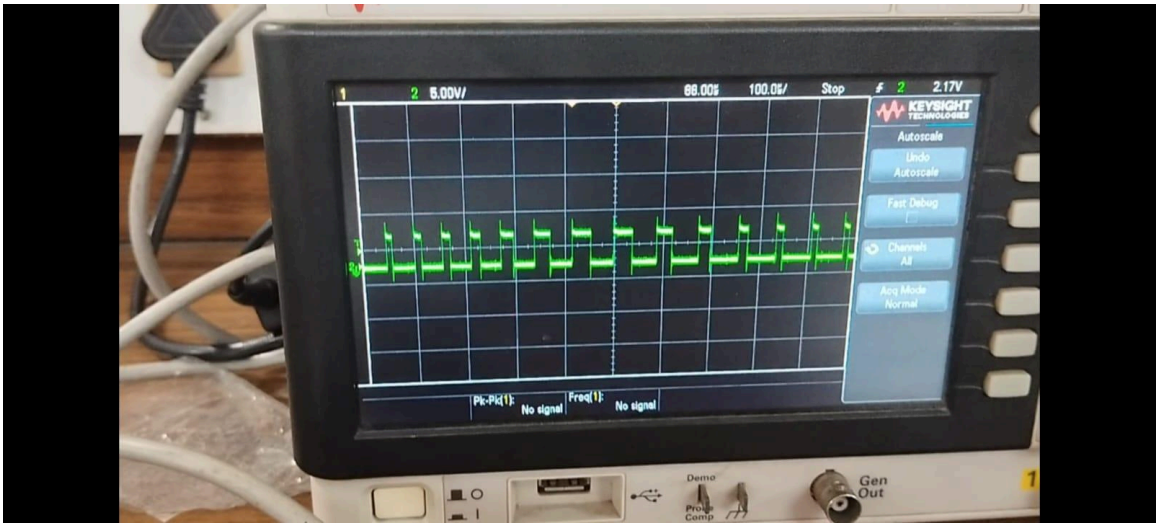

The initial modulated square wave output of 555 timer

Errors:

The observed sudden jump discontinuities in the out waveform is due to the **Gibbs Phenomenon.**

The Gibbs phenomenon causes overshoots and undershoots around the discontinuity. As more components of the Fourier series are added, the overshoot approaches about 9% of the jump.

Results: The expected carrier frequency and modulated output were analyzed using the Wien bridge oscillator as the carrier source and the 555 timer IC for modulation.

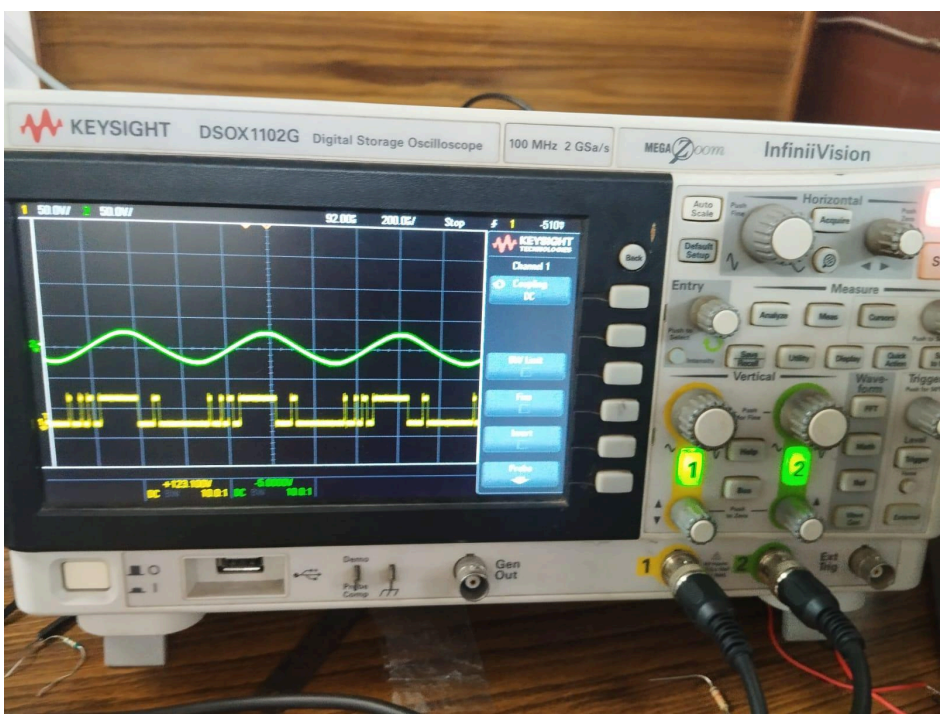

Note: The observed instantaneous frequency is not at the positive amplitude of the message signal due to the 180° phase shift that is introduced by the 555 IC timer.

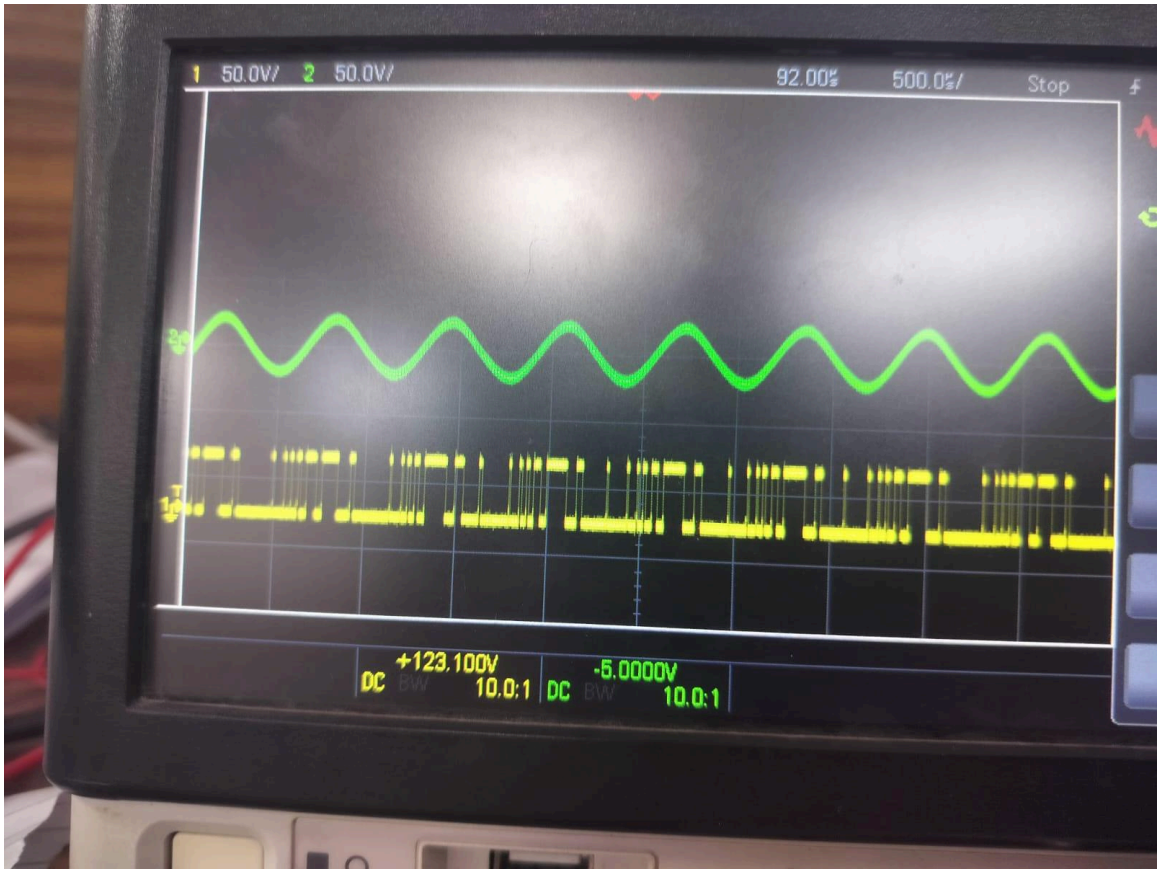

This is a compressed view of the above modulation.

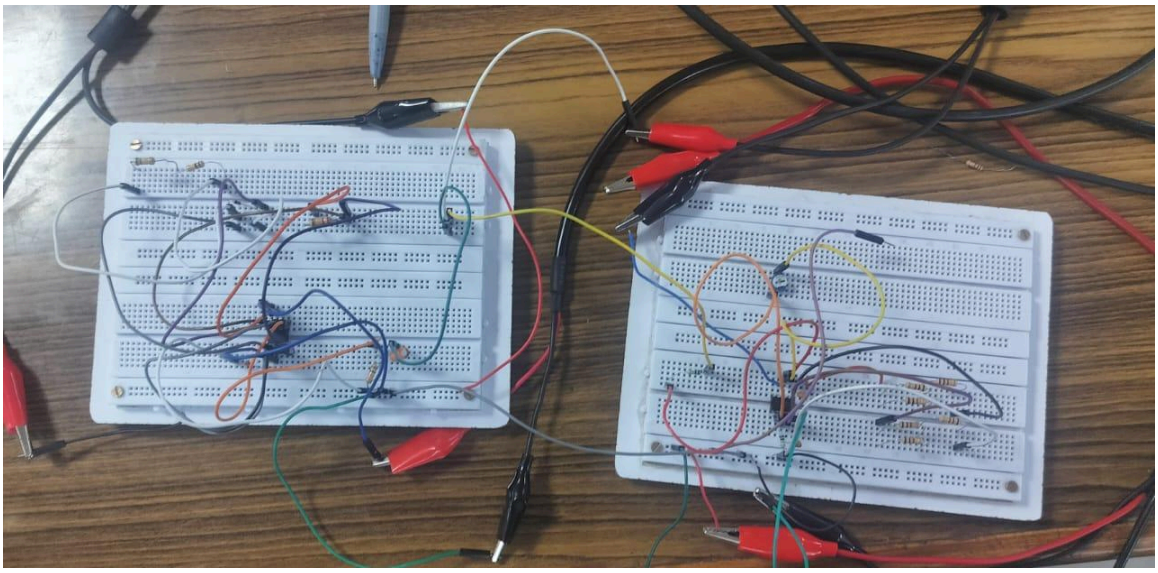

This is our final Circuit (**Left:** 555 timer FM modulator , **Right:** Wien's Bridge Oscillator for message signal generation)

Observations:

- Measured carrier frequency and modulated frequencies.
- Observed amplitude and frequency modulation behavior using the 555 timer IC.

Conclusion:

This project successfully implemented FM modulation using a Wien bridge oscillator as a carrier source and a 555 timer IC for frequency modulation. The oscillator generated a stable sinusoidal message signal, and frequency modulation was achieved by varying the output frequency of the 555 timer. This demonstrates the practical capability of combining analog oscillators with digital modulation techniques for flexible FM applications.

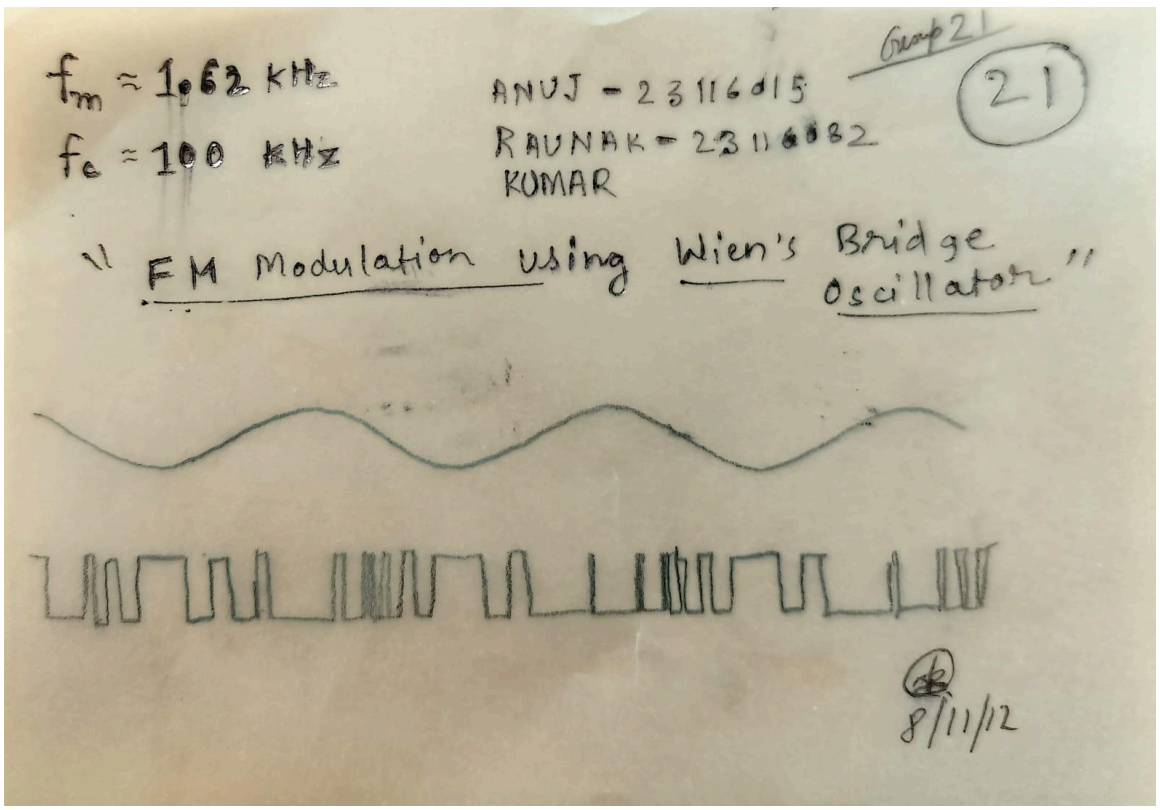

Trace paper verification(adjusting the phase shift introduced by 555 timer using oscilloscope shift knob)