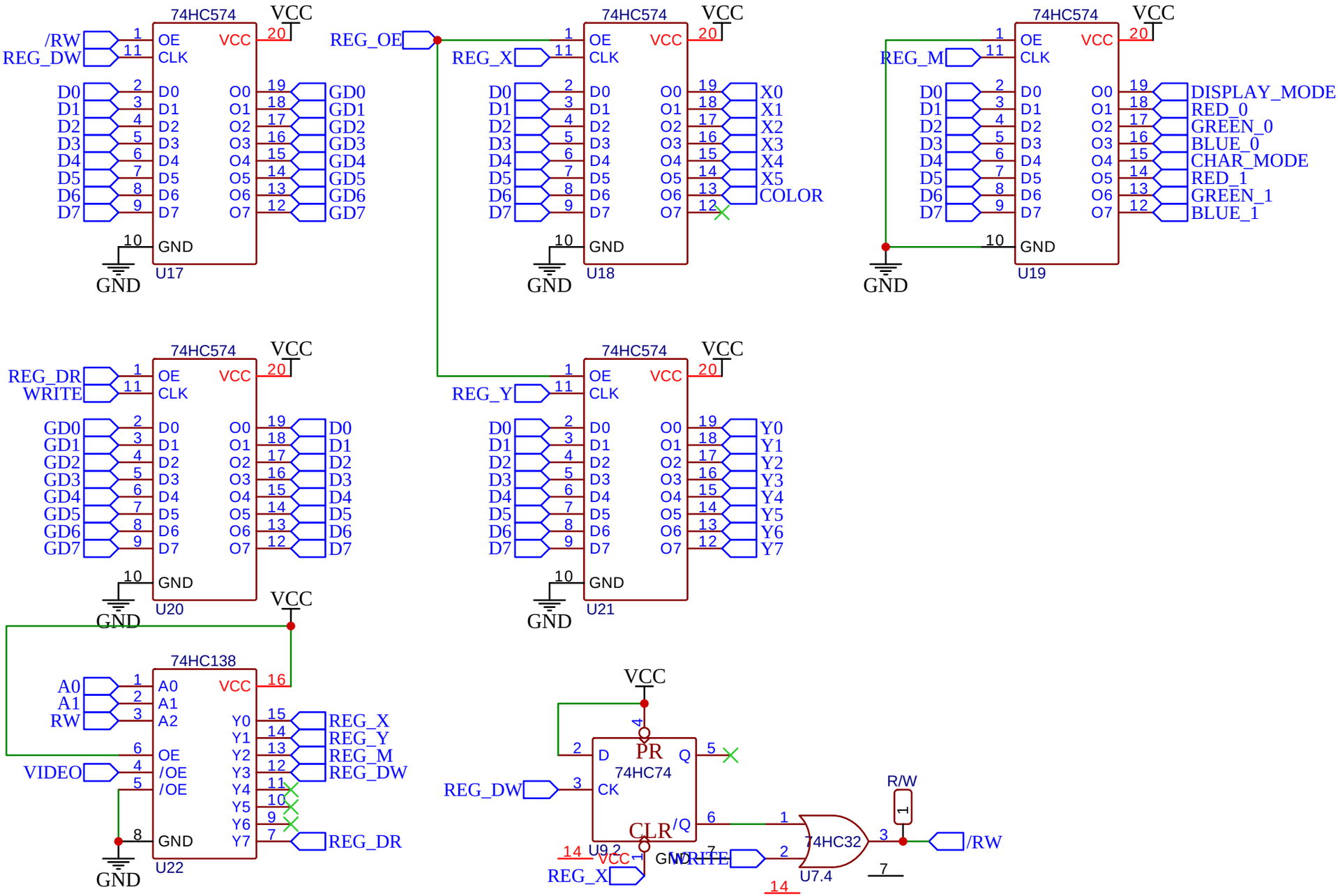

TITLE: REGISTERS

REV: 1.0

Company: Your Company

Sheet: 3/4

Date: 2022-11-17

Drawn By: CodeBender