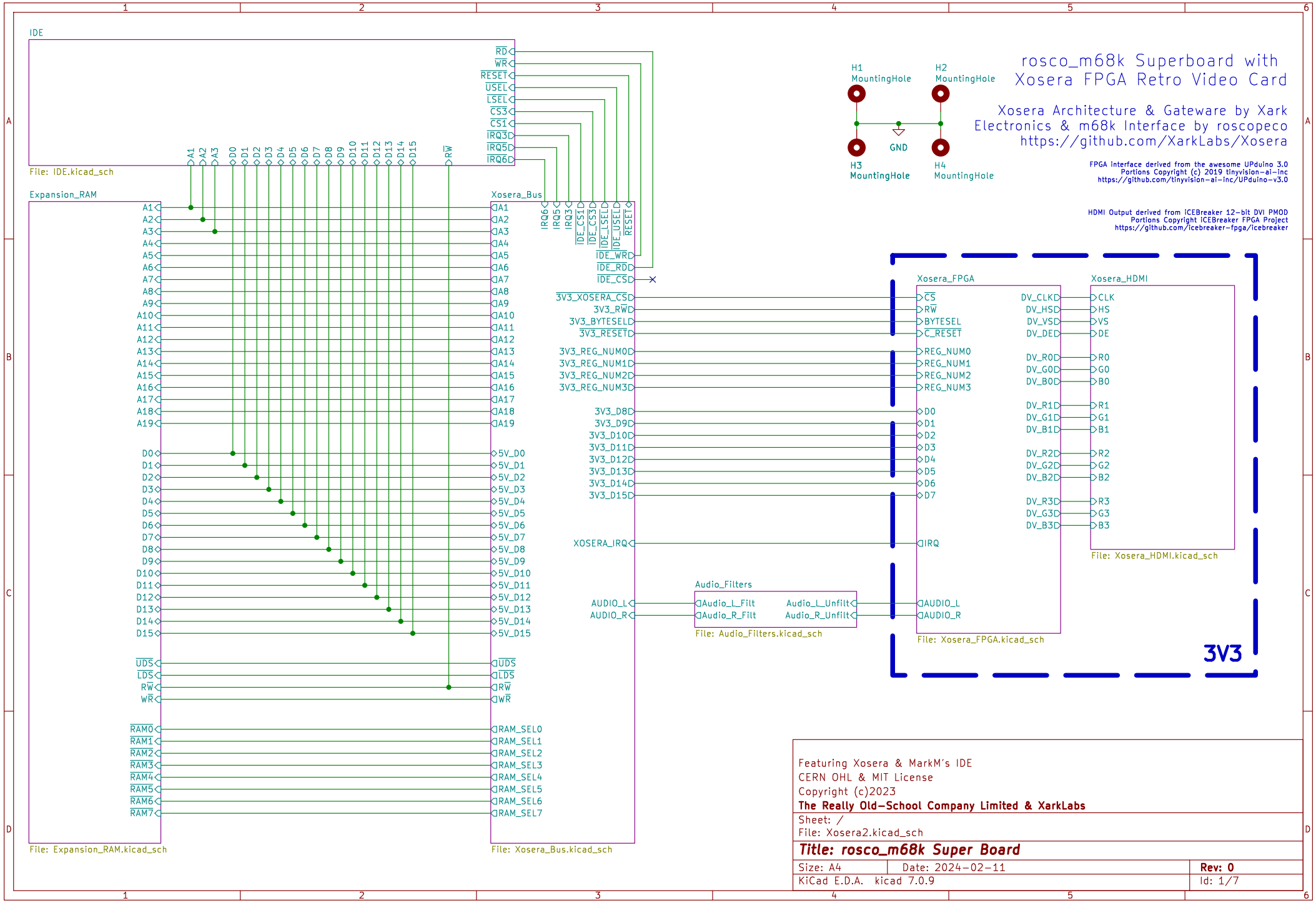
IDE
File: IDE.kicad_sch
Expansion_RAM
File: Expansion_RAM.kicad_sch
Xosera_Bus
File: Xosera_Bus.kicad_sch
Audio_Filters
File: Audio_Filters.kicad_sch
Xosera_FPGA
File: Xosera_FPGA.kicad_sch
Xosera_HDMI
File: Xosera_HDMI.kicad_sch
3V3
H1 MountingHole
H2 MountingHole
H3 MountingHole
H4 MountingHole
GND
rosco_m68k Superboard with
Xosera FPGA Retro Video Card
Xosera Architecture & Gateware by Xark
Electronics & m68k Interface by roscopeco
https://github.com/XarkLabs/Xosera
FPGA interface derived from the awesome UPduino 3.0
Portions Copyright (c) 2019 tinyvision-ai-inc
https://github.com/tinyvision-ai-inc/UPduino-v3.0
HDMI Output derived from iCEBreaker 12-bit DVI PMOD
Portions Copyright iCEBreaker FPGA Project
https://github.com/icebreaker-fpga/icebreaker
Featuring Xosera & MarkM's IDE
CERN OHL & MIT License
Copyright (c)2023
The Really Old-School Company Limited & XarkLabs
Sheet: /
File: Xosera2.kicad_sch
Title: rosco_m68k Super Board
Size: A4
Date: 2024-02-11
Rev: 0
KiCad E.D.A. kicad 7.0.9
Id: 1/7

FPGA Power

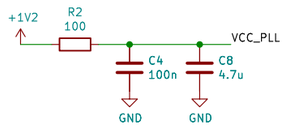

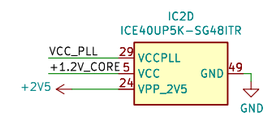

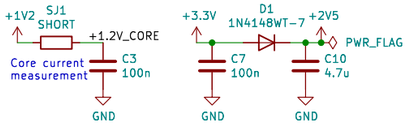

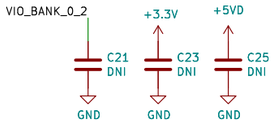

FPGA Banks

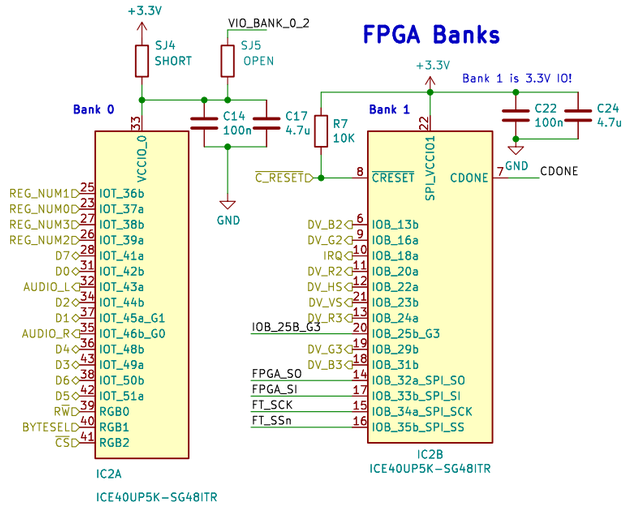

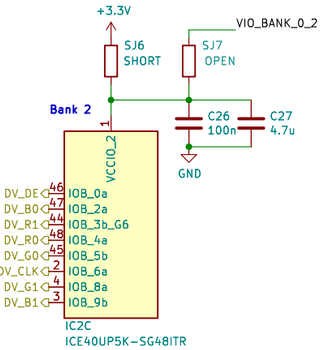

12MHz Oscillator

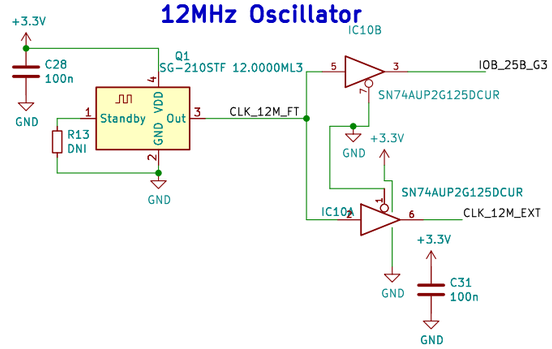

Regulators (300mA max)

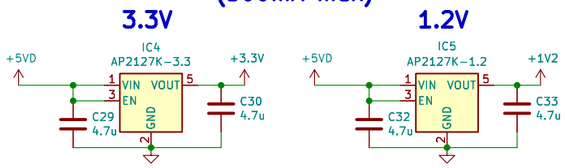

FTDI programmer

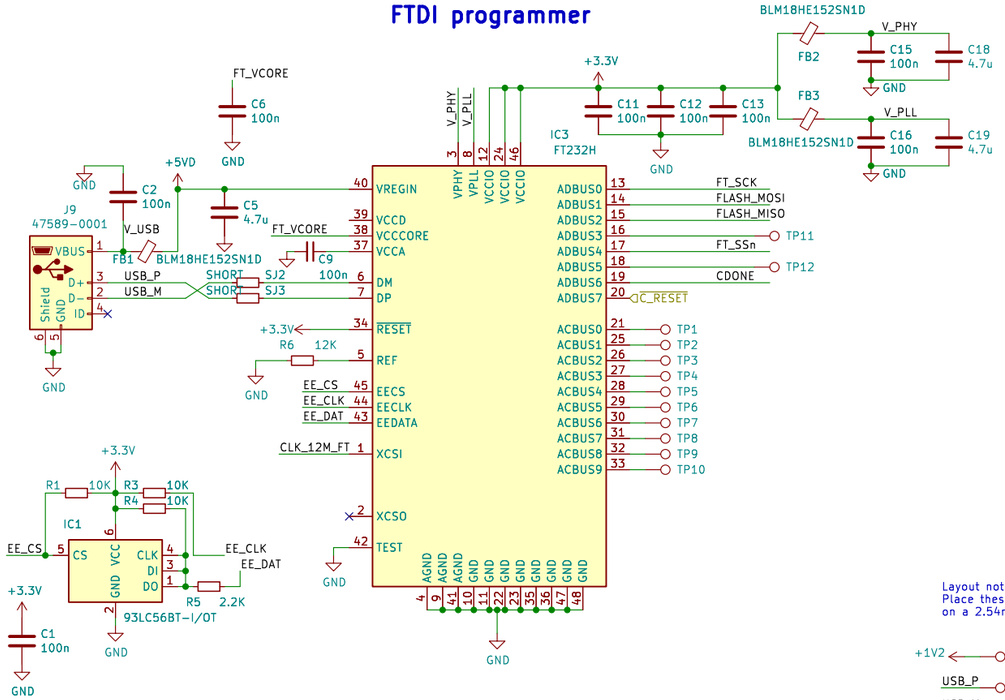

qSPI/DTR Flash

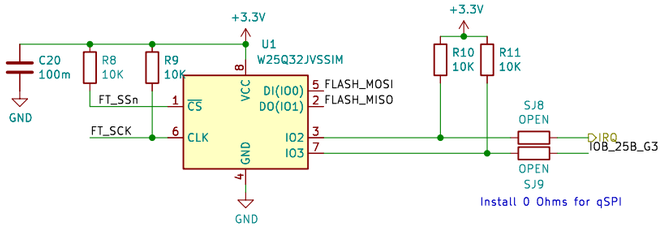

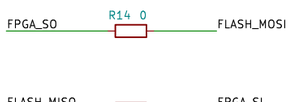

Layout note:
Place these testpoints on the bottom of the board on a 2.54mm grid.

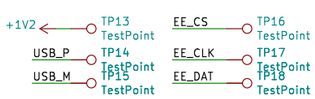

FID1 Fiducial FID3 Fiducial FID5 Fiducial
FID2 Fiducial FID4 Fiducial FID6 Fiducial

Featuring Xosera & MarkM's IDE
CERN OHL & MIT License
Copyright (c)2023
The Really Old-School Company Limited & XarkLabs

Sheet: /Xosera_FPGA/
File: Xosera_FPGA.kicad_sch

Title: rosco_m68k Super Board

Size: A3	Date: 2024-02-11	**Rev: 0**
KiCad E.D.A. kicad 7.0.9		Id: 2/7

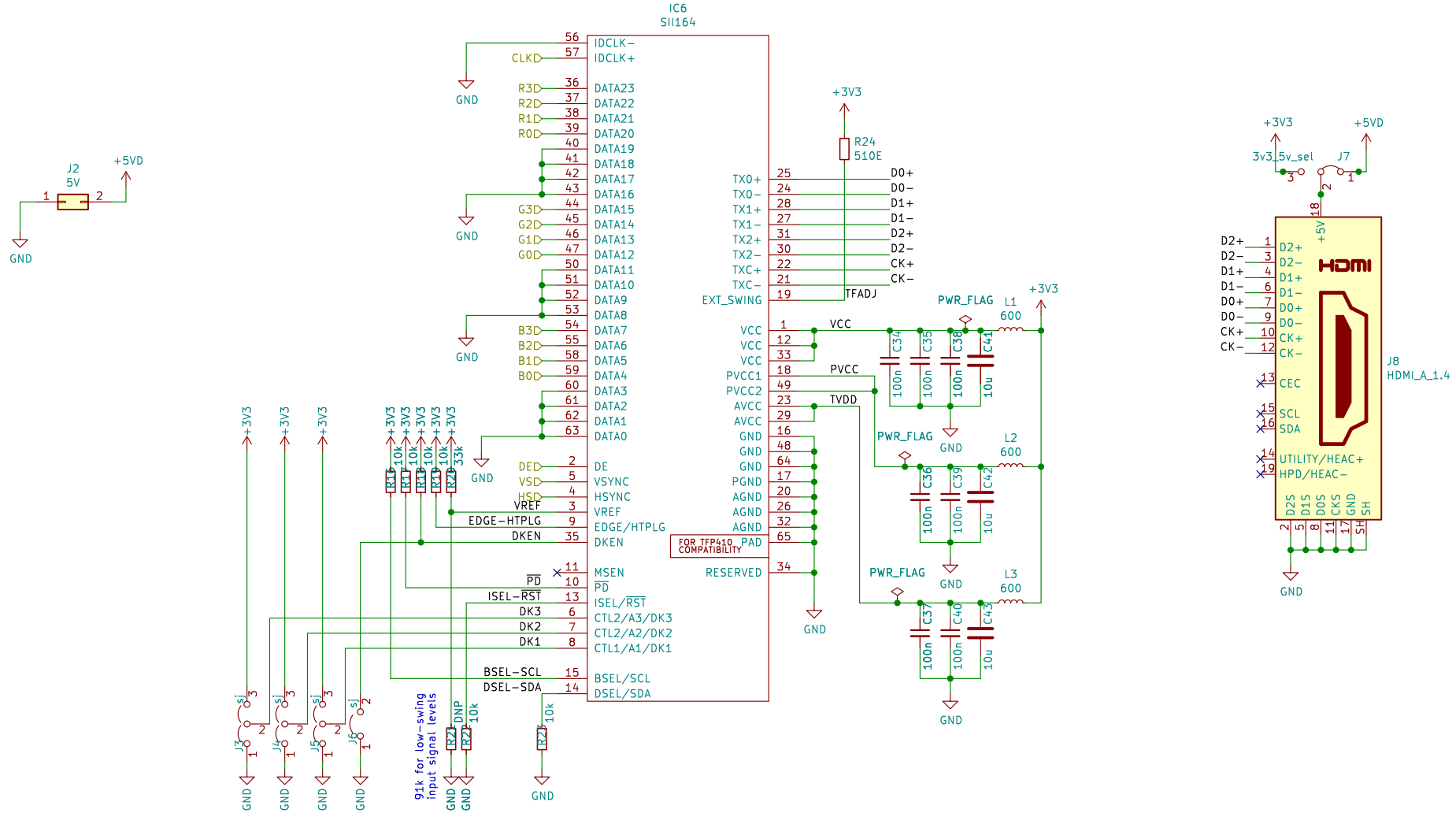

Featuring Xosera & MarkM's IDE
CERN OHL & MIT License
Copyright (c)2023
The Really Old−School Company Limited & XarkLabs

Sheet: /Xosera_HDMI/
File: Xosera_HDMI.kicad_sch

Title: rosco_m68k Super Board

Size: A4	Date: 2024−02−11	**Rev: 0**
KiCad E.D.A. kicad 7.0.9		Id: 3/7

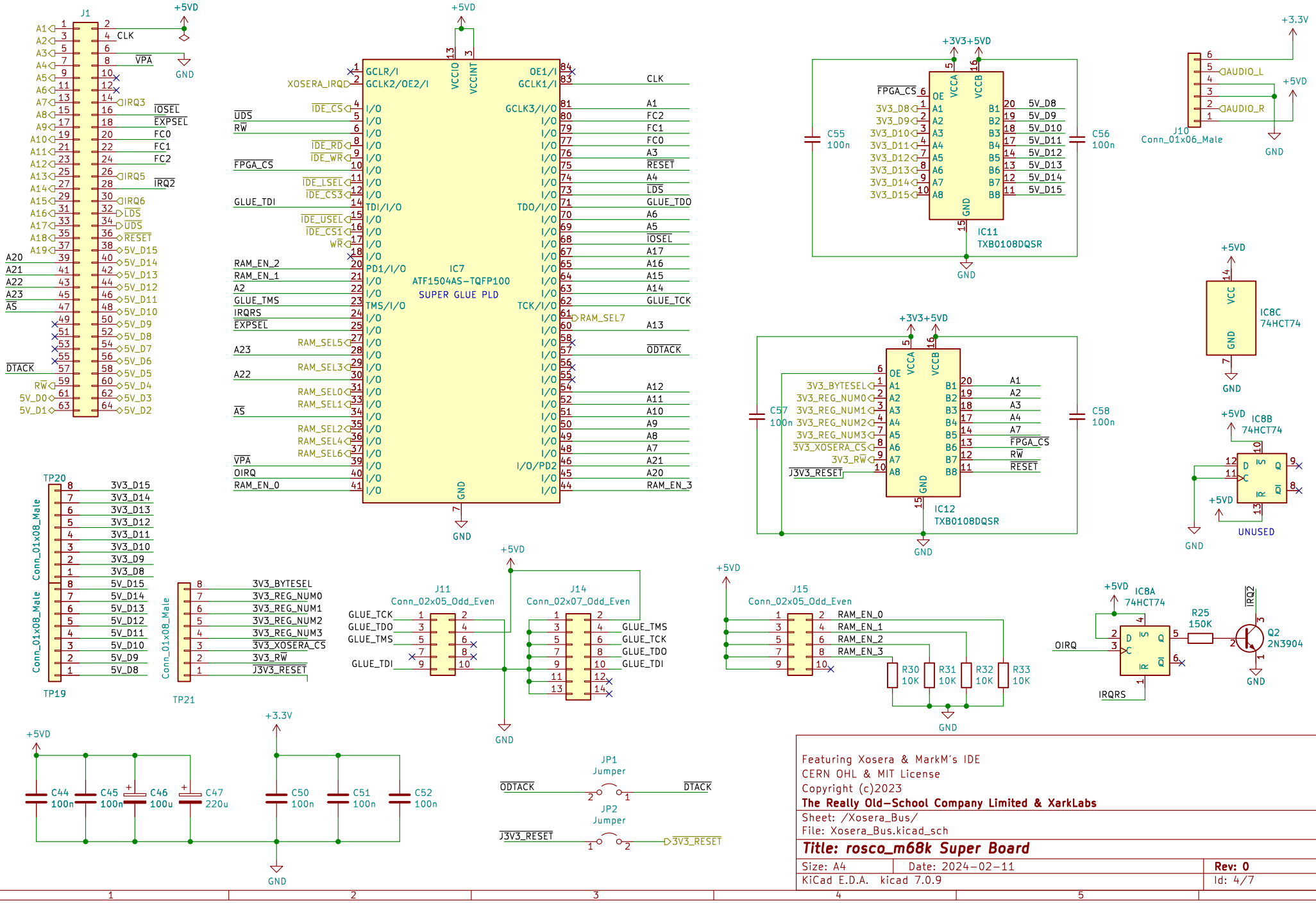

Featuring Xosera & MarkM's IDE
CERN OHL & MIT License
Copyright (c)2023
The Really Old-School Company Limited & XarkLabs
Sheet: /Xosera_Bus/
File: Xosera_Bus.kicad_sch

Title: rosco_m68k Super Board

Size: A4	Date: 2024-02-11	Rev: 0
KiCad E.D.A. kicad 7.0.9		Id: 4/7

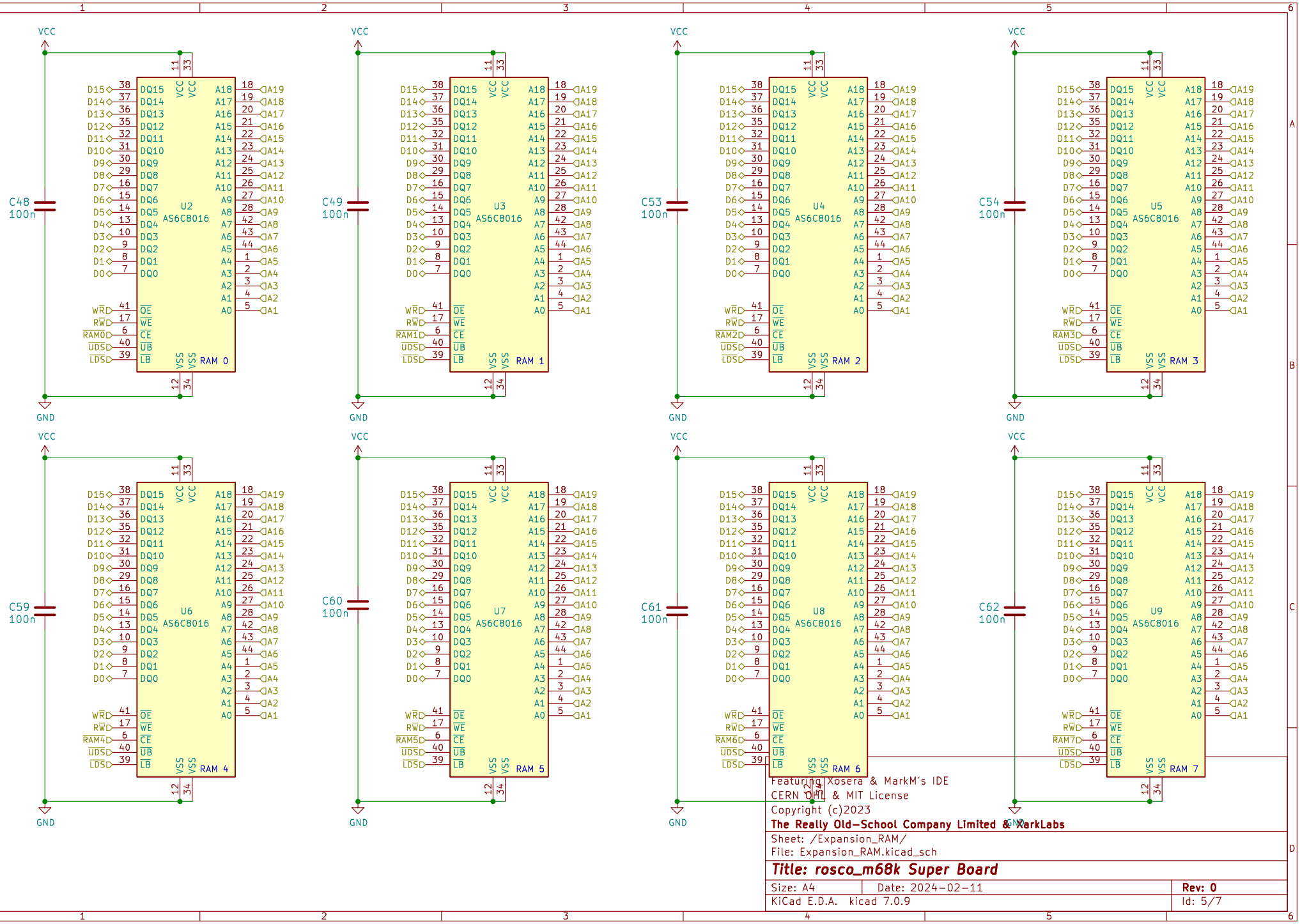
VCC
GND
C48
100n
U2
AS6C8016
RAM 0
C49
100n
U3
AS6C8016
RAM 1
C53
100n
U4
AS6C8016
RAM 2
C54
100n
U5
AS6C8016
RAM 3
C59
100n
U6
AS6C8016
RAM 4
C60
100n
U7
AS6C8016
RAM 5
C61
100n
U8
AS6C8016
RAM 6
C62
100n
U9
AS6C8016
RAM 7
Featuring Xosera & MarkM's IDE
CERN OHL & MIT License
Copyright (c)2023
The Really Old-School Company Limited & XarkLabs
Sheet: /Expansion_RAM/
File: Expansion_RAM.kicad_sch
Title: rosco_m68k Super Board
Size: A4
Date: 2024-02-11
Rev: 0
KiCad E.D.A. kicad 7.0.9
Id: 5/7

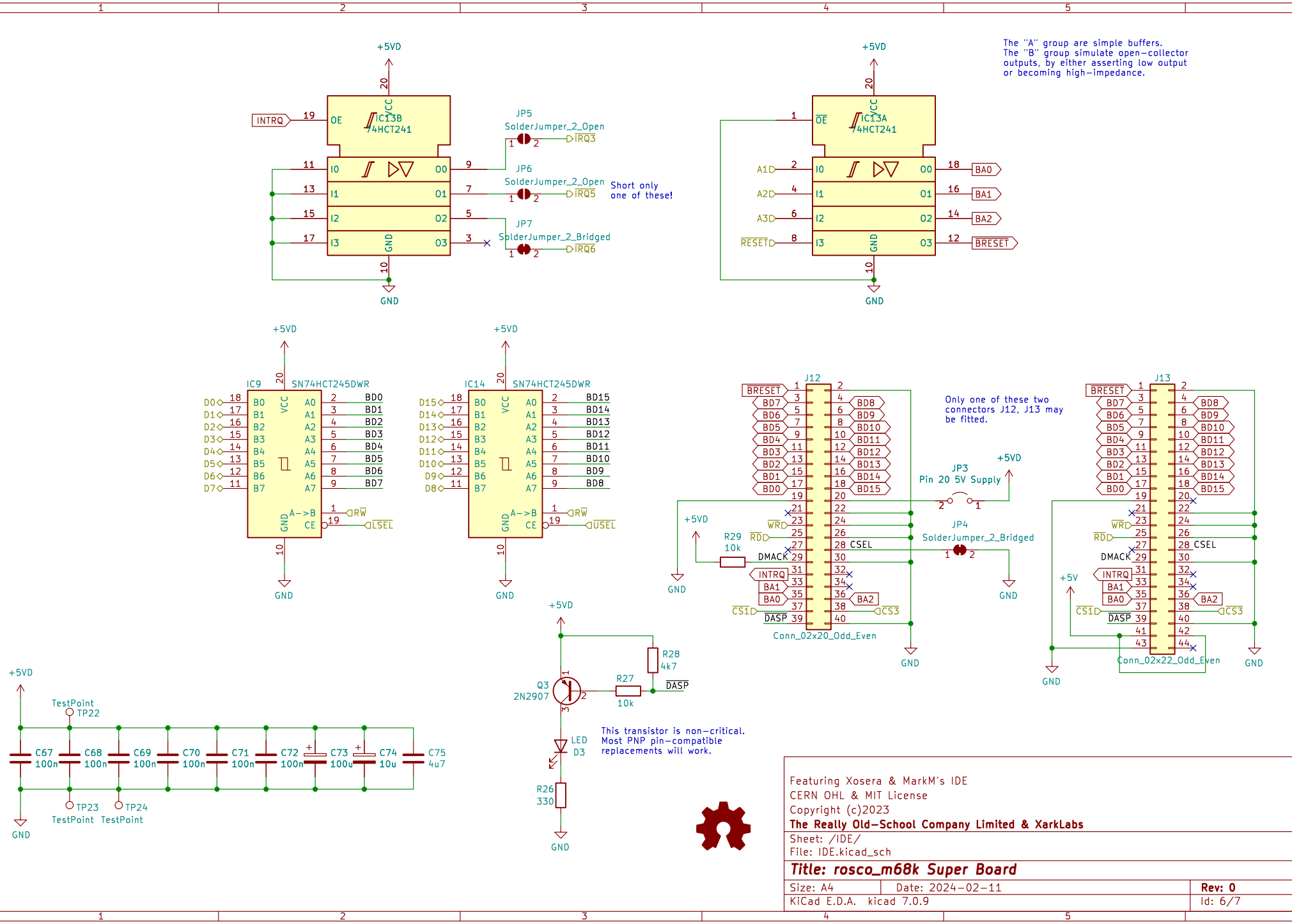
+5VD
IC13B
74HCT241
INTRQ
JP5
SolderJumper_2_Open
IRQ3
JP6
SolderJumper_2_Open
IRQ5
JP7
SolderJumper_2_Bridged
IRQ6
Short only one of these!
GND
IC13A
74HCT241
BA0
BA1
BA2
BRESET
RESET
The "A" group are simple buffers.
The "B" group simulate open-collector outputs, by either asserting low output or becoming high-impedance.
IC9
SN74HCT245DWR
IC14
SN74HCT245DWR
BD0
BD1
BD2
BD3
BD4
BD5
BD6
BD7
BD8
BD9
BD10
BD11
BD12
BD13
BD14
BD15
RW
USEL
J12
J13
Only one of these two connectors J12, J13 may be fitted.
JP3
Pin 20 5V Supply
JP4
SolderJumper_2_Bridged
R29
10k
WR
RD
CSEL
DMACK
INTRQ
BA1
BA0
BA2
CS1
CS3
DASP
Conn_02x20_Odd_Even
Conn_02x22_Odd_Even
+5V
TestPoint
TP22
TP23
TP24
C67
100n
C68
100n
C69
100n
C70
100n
C71
100n
C72
100n
C73
100u
C74
10u
C75
4u7
Q3
2N2907
R27
10k
R28
4k7
LED
D3
R26
330
This transistor is non-critical.
Most PNP pin-compatible replacements will work.
Featuring Xosera & MarkM's IDE
CERN OHL & MIT License
Copyright (c)2023
The Really Old-School Company Limited & XarkLabs
Sheet: /IDE/
File: IDE.kicad_sch
Title: rosco_m68k Super Board
Size: A4
Date: 2024-02-11
Rev: 0
KiCad E.D.A. kicad 7.0.9
Id: 6/7

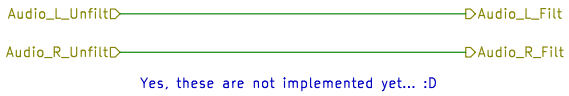

Featuring Xosera & MarkM's IDE

CERN OHL & MIT License
Copyright (c)2023
The Really Old-School Company Limited & XarkLabs

Sheet: /Audio_Filters/
File: Audio_Filters.kicad_sch

Title: rosco_m68k Super Board

Size: A4	Date: 2024-02-11	**Rev: 0**
KiCad E.D.A. kicad 7.0.9		Id: 7/7