PCM marine engines

2020 MY
Parts Manual
Model Number
P 02 03 D 03 1 SFW 20

Performance To Move You

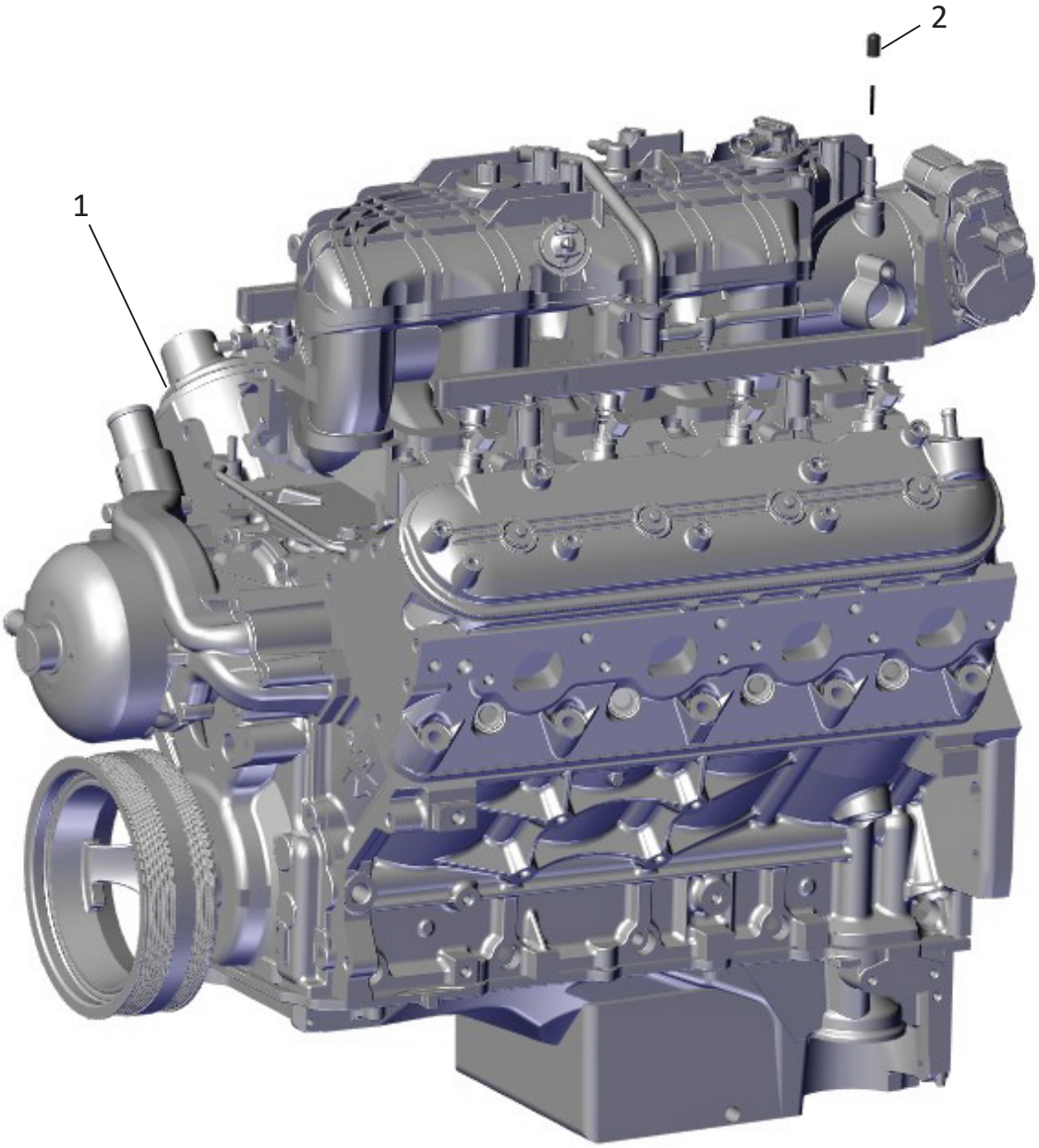

ITEM NO.	PARTNO	DESCRIPTION	QTY.
1	RB001022	BASE ENGINE, 6.0L	1
2	R128004	VACUUM CAP	1

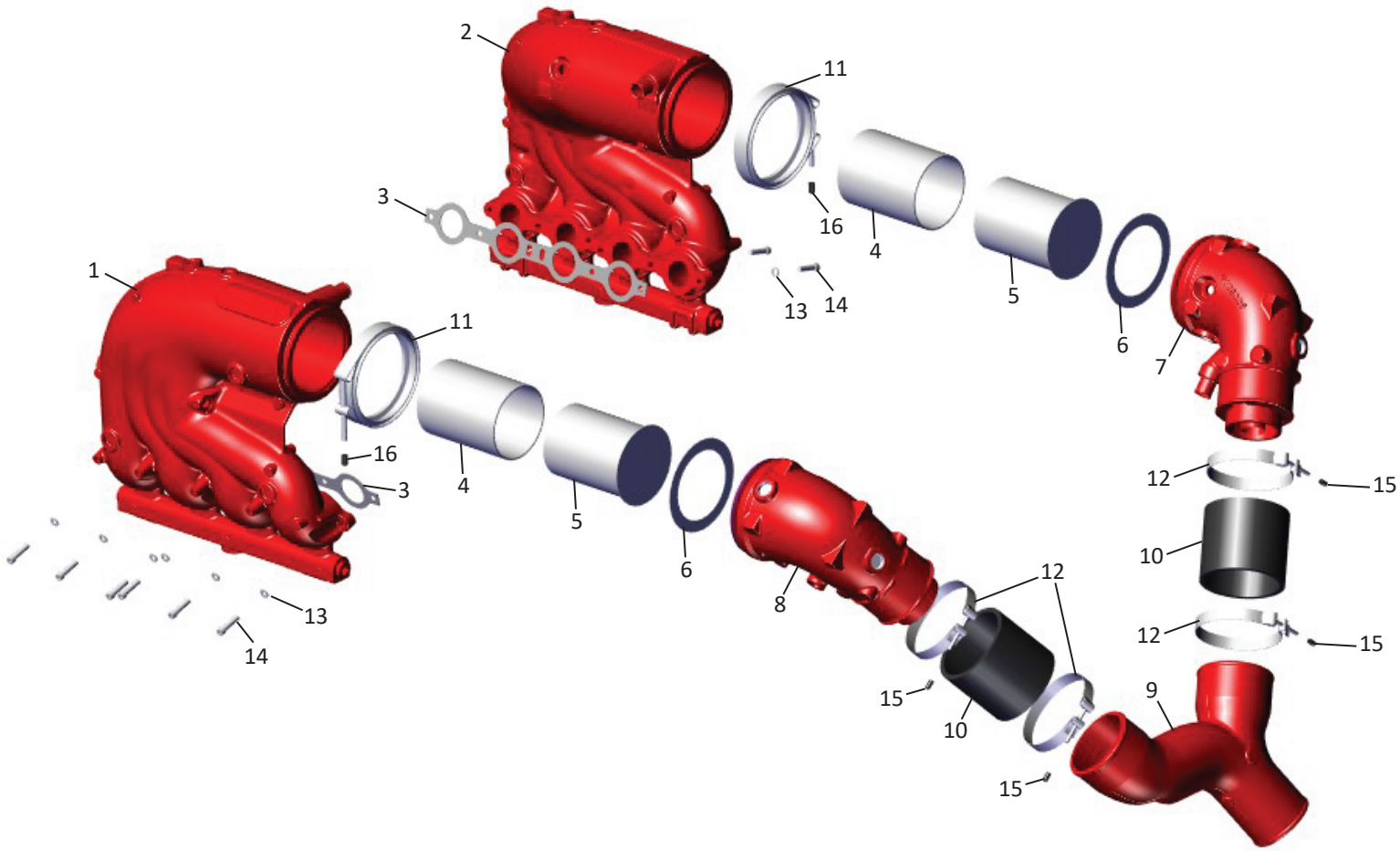

ITEM NO.	PARTNO	DESCRIPTION	QTY.
1	RA028035A	MANIFOLD ASSY, 6.0L	1
2	RA028034A	MANIFOLD ASSY, RIGHT	1
3	RM0276A	GASKET, MANIFOLD-HEAD	2
4	RM0291	MESH, CATALYST	2
5	R144004A	CATALYST, COATED	2
6	RM0304	GASKET, CORNER	2
7	RA133006B	CORNER ASSY, RIGHT, DI	1
8	RA133007B	CORNER ASSY, LEFT	1
9	R133011	Y-PIPE, 6.0L	1

ITEM NO.	PARTNO	DESCRIPTION	QTY.
10	R045242	HOSE, EXHAUST, 4 1/2 DIA X 4 1/2 LONG	2
11	R171012	CLAMP, V-BAND	2
12	R171013	CLAMP, T-BOLT, 4 1/2 DIA	4
13	93934000	LOCKWASHER, M8, SS	12
14	RS6284	SHCS, M8 X 1.25 X 35, SS	12
15	R128002	COVER, T-BOLT END	4
16	R128004	VACUUM CAP	2

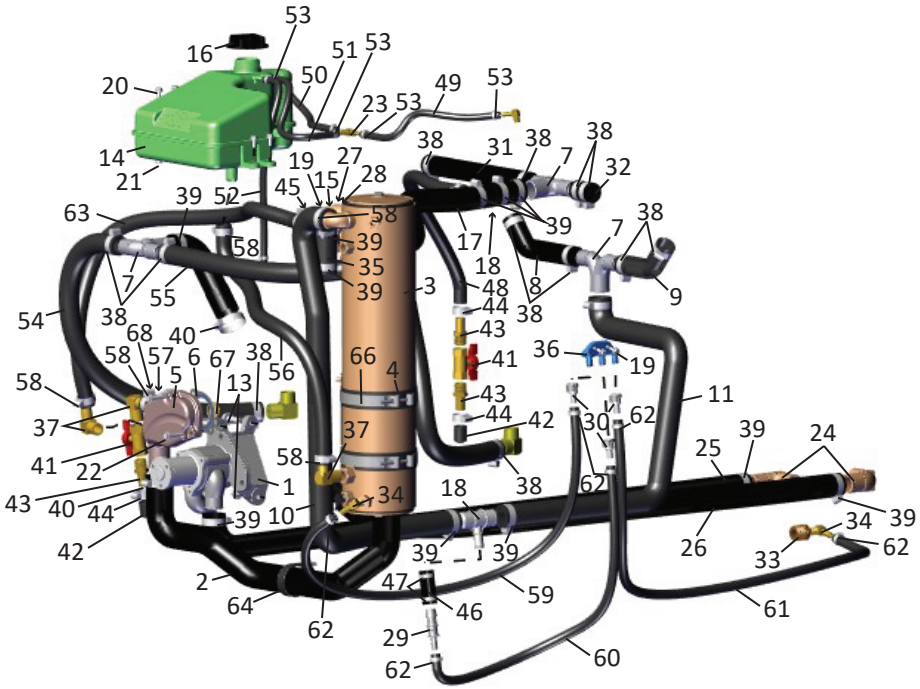

ITEM NO.	PARTNO	DESCRIPTION	QTY.	LENGTH (IN.)
1	RA057042	RWP, 6.0L	1	
2	R045258	HOSE, HE OUT TO CIRC PUMP IN	1	
3	RA147062	HEAT EXCHANGER, 5IN	1	
4	R094055	ISOLATOR, HEAT EXCHANGER	1	
5	R025052A	WATER NECK, 6.0L	1	
6	RM0275	GASKET, TSTAT/HSG	1	
7	R024054D	TEE, 1 X 1 X 1 1 1/4	3	
8	R045270	HOSE, TEE TO CORNER	1	
9	R045271	HOSE, TEE TO CORNER	1	
10	R045266	HOSE, HE TO DRAIN	1	
11	R045267	HOSE, DRAIN TO CORNER TEE	1	
12	R045269	HOSE, CIRC PUMP TO TEE	1	
13	98442030	FHCS, M10 X 1.5 X 30	3	
14	R146003	RESERVOIR, DEGAS BOTTLE	1	
15	R025045B	HSG, TSTAT	1	
16	R034045	CAP, DEGAS BOTTLE	1	
17	R045279	HOSE, MANIFOLD TEE TO 90 DEG TSTAT HOUSING	1	
18	R024278	TEE, 1 1/4 X 1 1/4 X 5/8 HOSE	2	
19	98225016	FHCS, M6 X 1.0 X 16,SS	8	
20	98225020	FHCS, M6 X 1.0 X 20, SS	2	
21	97224300	LOCKNUT, NYLON, M6 X 1.0, SS	2	
22	98222035	FHCS, M6 X 1.0 X 35	2	
23	R024245	FITTING TEE 1/4" HOSE BARB	1	

ITEM NO.	PARTNO	DESCRIPTION	QTY.	LENGTH (IN.)
24	97854	BRASS ELBOW 90 SHORT 1" X 1-1/4	2	
25	20865	HOSE, 1 1/4" WIRE REINFORCED BULK	1	51"
26	20865	HOSE, 1 1/4" WIRE REINFORCED BULK	1	47"
27	R026007	T'STAT 170 DEG. w/HOLE	1	
28	R047264	SEAL, TSTAT	1	
29	R024289	FITTING, REDUCER, .625 HOSE TO .375 HOSE	1	
30	R024287	DRAIN, QUICK CONNECT .375 HOSE BARB COUPLER	3	
31	R045107	HOSE, 1" ID BULK	1	9.5"
32	R045107	HOSE, 1" ID BULK	1	4"
33	RS3683	BUSHING, .75 NPTM X .25 NPTF HXHD	1	
34	R024089	FITTING, .25 NPT X .375 HOSE BARB 90 DEGREE	2	
35	R045257	HOSE, DUAL COOLER TO HE	1	
36	R069083	PLUG, RAW WATER DRAIN	1	
37	R024070	FITTING, 1/2 NPT X 3/4 HOSE 90 DEGREE	3	
38	RS3851	CLAMP, #16	12	
39	RS3858	CLAMP, #20	15	
40	RS3868	CLAMP, #24	3	
41	R035039A	VALVE, BALL	2	
42	R128007	CAP, RUBBER 5/8"	2	
43	30645	CONNECTOR, .5 NPT X .625 HOSE	3	
44	RS3864	CLAMP, #8	6	
45	R024069	CONNECTOR, HOSE .5 NPT X .75	1	
46	20806	HOSE, 5/8" BULK	2	3"

ITEM NO.	PARTNO	DESCRIPTION	QTY.	LENG
47	R127087F	CLAMP, OETIKER 1"	2	
48	20806	HOSE, 5/8 BULK	1	28
49	R045132	HOSE, 1/4 BULK	1	11"
50	R045132	HOSE, 1/4 BULK	1	11"
51	R045132	HOSE, 1/4 BULK	1	11"
52	R045132	HOSE, 1/4 BULK	1	15"
53	R127087A	CLAMP, OETIKER, 5/8"	8	
54	20866	HOSE, 1" BULK WIRE RENFORCED	1	29"
55	20866	HOSE, 1" BULK WIRE REINFORCED	1	40"
56	R045153	HOSE, 3/4 BULK	1	27
57	R045153	HOSE, 3/4" BULK	1	3"
58	RS3865	CLAMP, #10	6	
59	R045049	HOSE, 3/8 BULK	1	34"
60	R045049	HOSE, 3/8 BULK	1	22"
61	R045049	HOSE, 3/8 BULK	1	43"
62	R127087C	CLAMP, OETIKER, 23/32"	6	
63	R045153	HOSE, 3/4 BULK	1	34"
64	22118	CLAMP, 2" COATED	1	
65	R047243	O'RING, MODULAR RWP BOLT	4	
66	R171009	CLAMP, T-BOLT	2	
67	R069073	PLUG, 30MM	1	
68	R069084	PLUG, 5/8" HOSE, GFN	1	

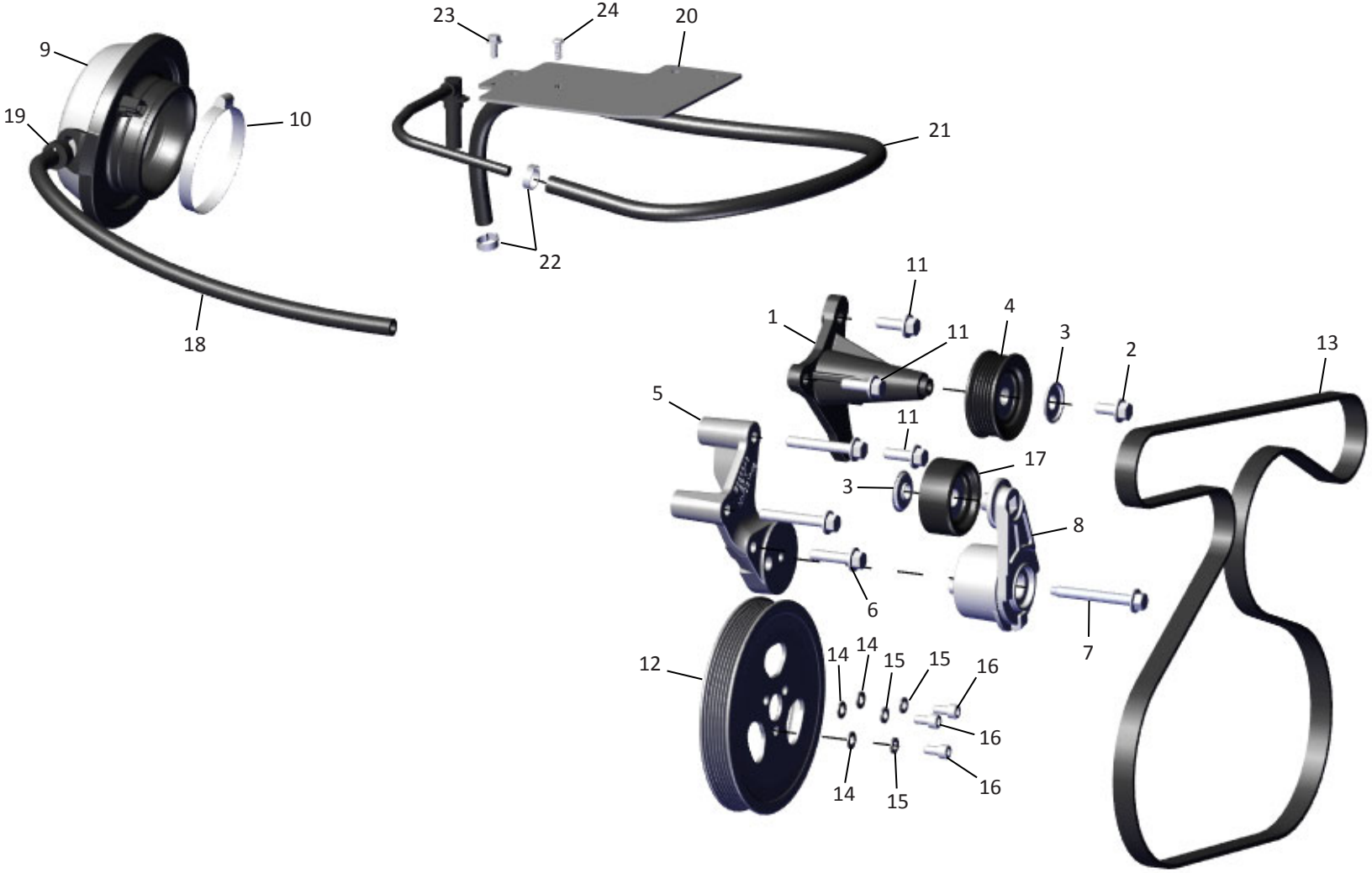

ITEM NO.	PartNo	DESCRIPTION	QTY.	Length (IN.)
1	R090479A	BRKT, IDLER, 6.0L	1	
2	98447025	FHCS, M10 X 1.5 X 25	1	
3	R096145	WASHER, IDLER	2	
4	R065054	PULLEY, IDLER, RIBBED	1	
5	R090480A	BRKT, TENSIONER, 6.0L, MACHINED	1	
6	98447045	FHCS, M10 X 1.5 X 45	1	
7	R009216	BOLT, TENSIONER, GM	1	
8	RA068008	TENSIONER, DRIVE BELT	1	
9	R145029	FLAME ARRESTOR	1	
10	RS3857	CLAMP, #64	1	
11	98442030	FHCS, M10 X 1.5 X 30	3	
12	R065050	PULLEY, RWP, 6.0L	1	
13	R066041	BELT, DRIVE, 6.0L	1	

ITEM NO.	PartNo	DESCRIPTION	QTY.	Length (IN.)
14	92934020	FLAT WASHER, M8, SS	3	
15	93934000	LOCKWASHER, M8, SS	3	
16	99335016	SHCS, M8 x 1.25 x 16	3	
17	R065064	PULLEY, 70 MM	1	
18	R045049	HOSE, 3/8" OIL RESISTANT	1	20"
19	20806	HOSE, BULK, 5/8	1	0.5"
20	R109071	PLATE, 6.0L LSX DECAL	1	
21	R045049	HOSE, 3/8 OIL RESISTANT LINE BULK	1	40"
22	R127087C	CLAMP, OETIKER, 23/32"	2	
23	98222016	FHCS, M6 X 1.0 X 16	1	
24	99900016	SCREW, M6-1.0 X 16 BHCS (TORX)	1	

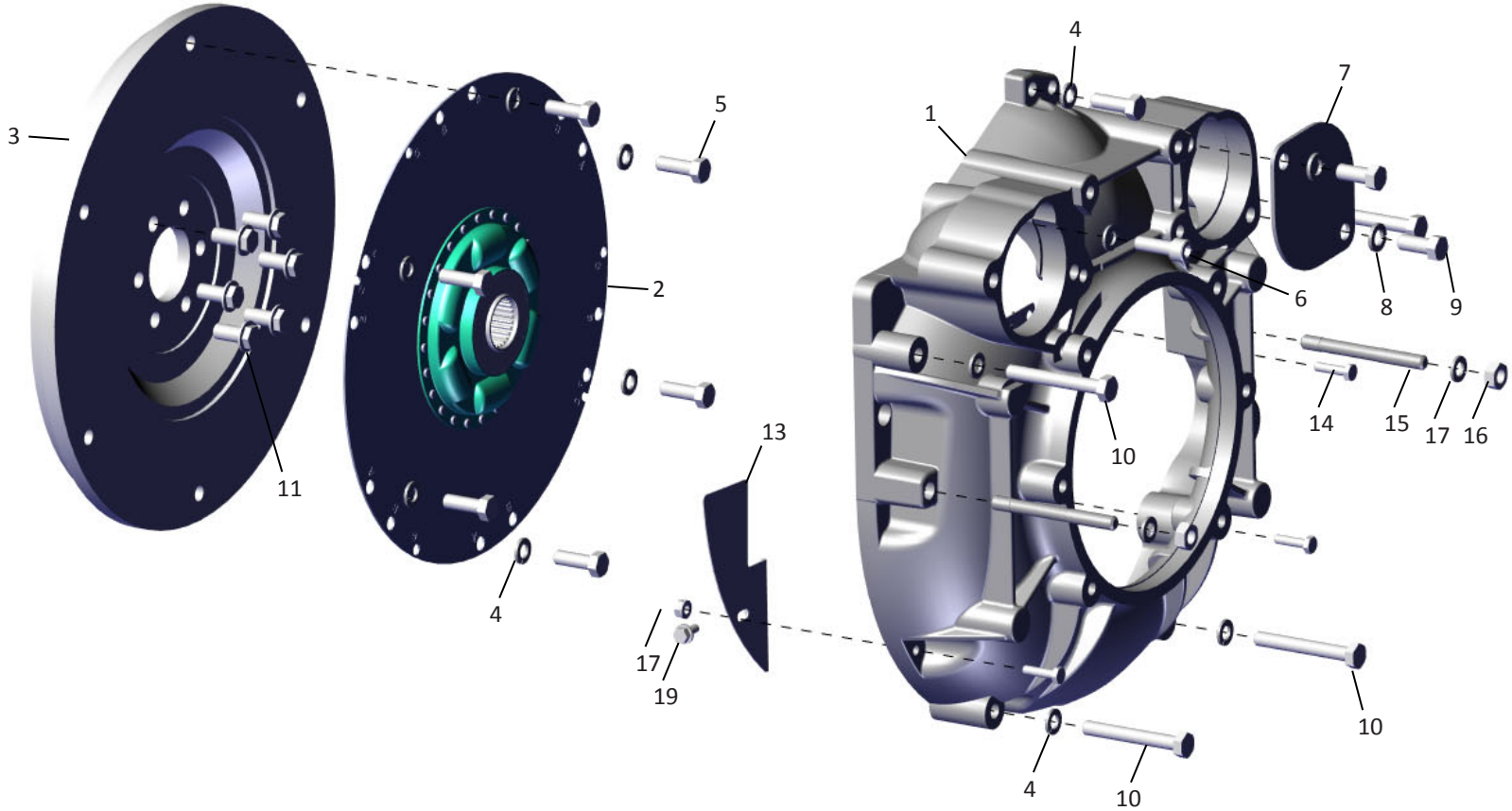

ITEM NO.	PartNo	DESCRIPTION	QTY.
1	R142015E	FLYWHEEL HSG	1
2	R140024	DAMPER	1
3	RA138017	FLYWHEEL, 6.0L	1
4	93940000	LOCKWASHER, M10	12
5	98446030	HHCS, M10 X 1.5 X 30	7
6	99443030	SHCS, M10 x 1.5 x 30	1
7	R019010	PLATE, COVER	1

ITEM NO.	PartNo	DESCRIPTION	QTY.
8	RS2181	LOCKWASHER, 7/16	2
9	RS0327	HHCS, 7/16-14 X 1.00	2
10	98446075	HHCS, M10 X 1.5 X 75	4
11	R009205	BOLT, FLYWHEEL	6
12	R019011A	PLATE, FLYWHEEL COVER	1
13	R019012	PLATE, FLYWHEEL COVER	1
14	RS0256	HHCS, 1/4 -20 X 1.00	3

ITEM NO.	PartNo	DESCRIPTION	QTY.
15	R031034	STUD, FLYWHEEL HSG	2
16	97444000	HEX NUT, M10 X 1.5, SS	2
17	93944000	LOCKWASHER, M10	2
18	RS1078	KEPS NUT, 1//4-20	3
19	98222016	FHCS, M6 X 1.0 X 16	2

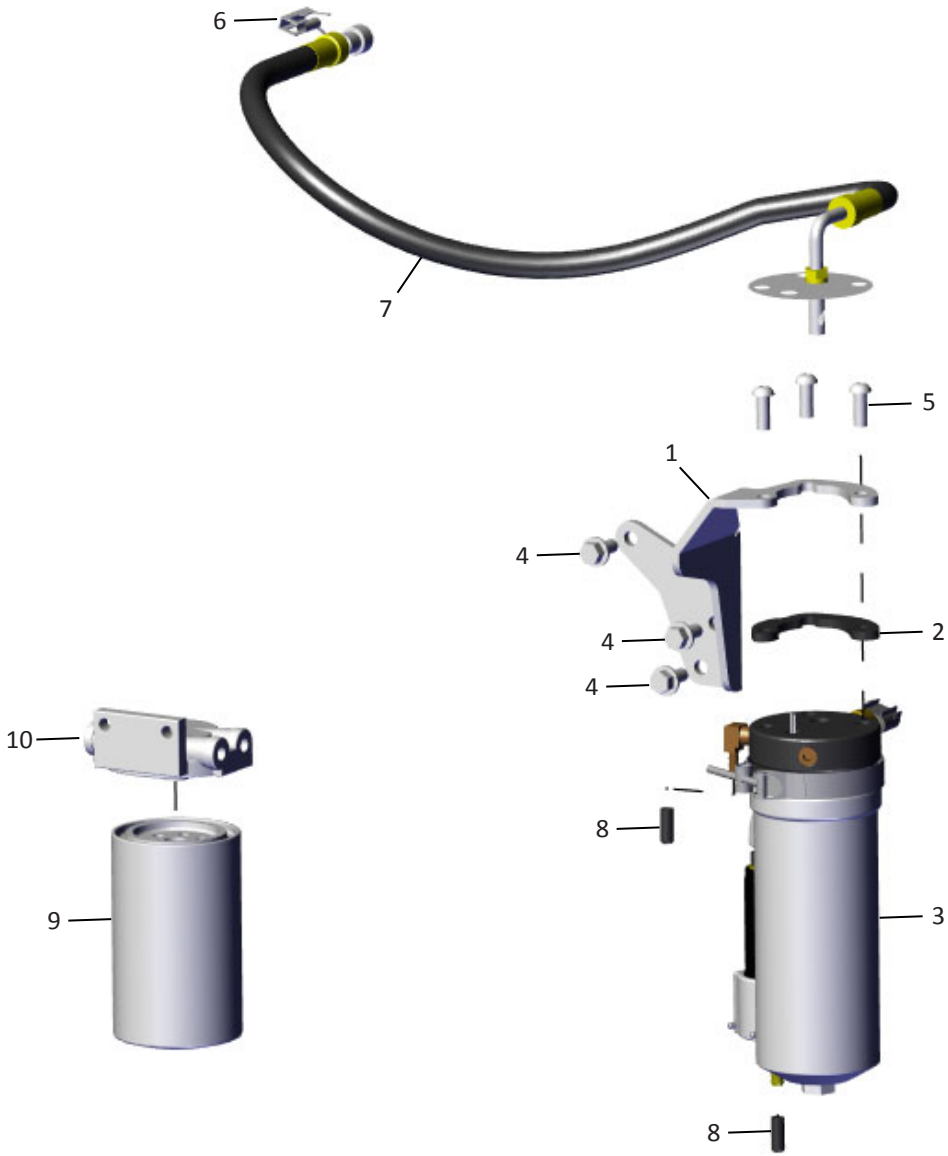

ITEM NO.	PARTNO	DESCRIPTION	QTY.
1	R090483	BRKT, FCC	1
2	R062100	SPACER, INSULATOR FCC, GEN 5	1
3	RA080038	FCC, DI	1
4	98447025	FHCS, M10 X 1.5 X 25	3
5	90384100	BHSCS, 3.8-16 X 1	3
6	R127100	RETAINER, FUEL LINE	1

ITEM NO.	PARTNO	DESCRIPTION	QTY.
7	RA085107	FUEL LINE, 6.0L	1
8	45343	RUBBER CAP, 3/8" I.D.	2
9	R077019	FILTER, FUEL	1
10	R079076	HEADER, FUEL FILTER	1

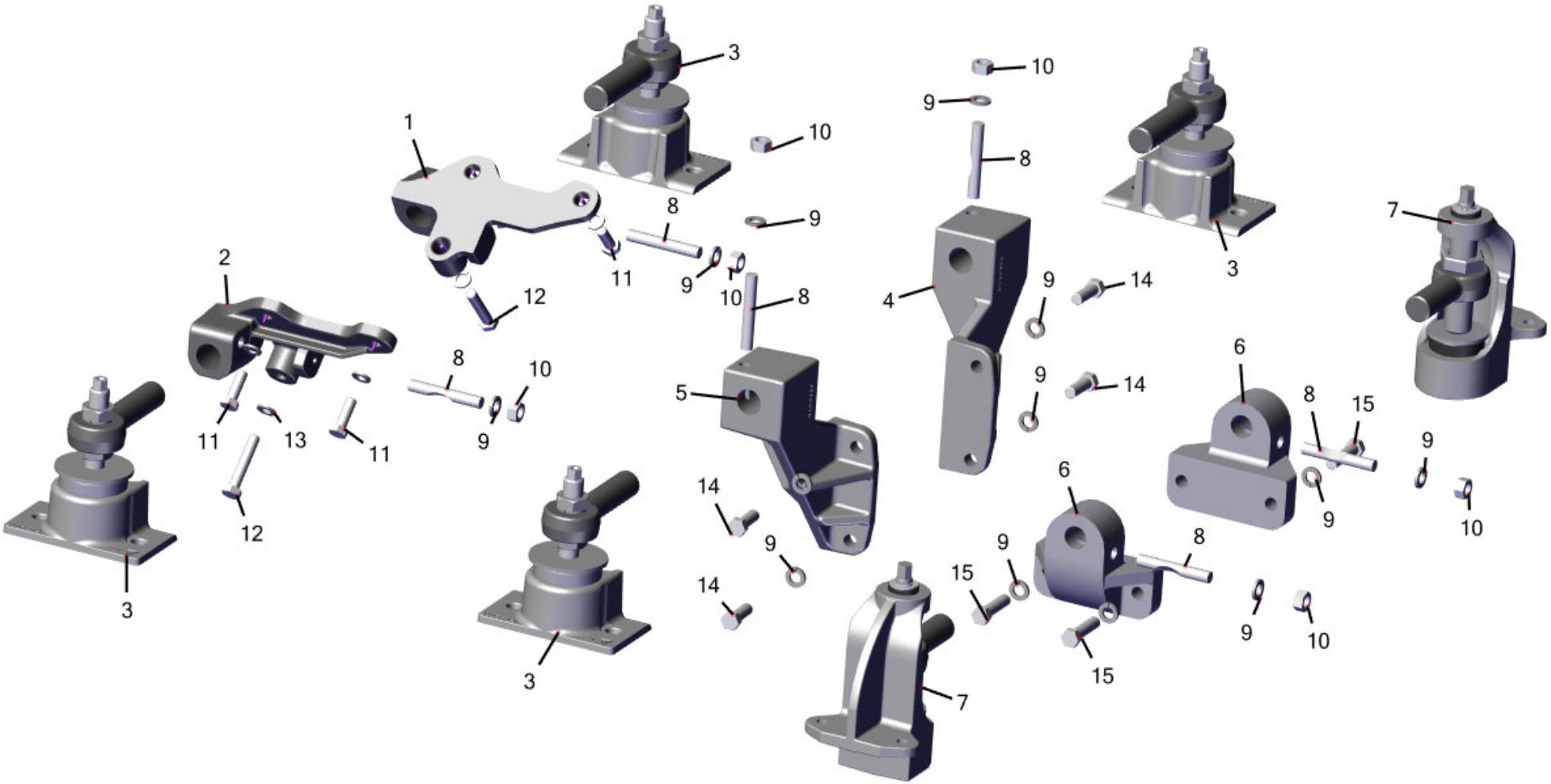

ITEM NO.	PartNo	DESCRIPTION	QTY.
1	R090294	MOUNT, ENGINE, STARBOARD	1
2	R090293	MOUNT, ENGINE, PORT	1
3	RA092016	FLAT MOUNT	4
4	R090354	MOUNT, TRANSMISSION, STBD	1
5	R090355	MOUNT, TRANSMISSION, PORT	1
6	R090205	BRKT, MOUNT	2
7	RA092011	MOUNT ASSY, LB-LT	2
8	R095020	BOLT, MOUNT LOCK	6

ITEM NO.	PartNo	DESCRIPTION	QTY.
9	RS2181	LOCKWASHER, 7/16	14
10	RS1529	HEX NUT, 7/16-20	6
11	98446030	HHCS, M10 X 1.5 X 30	4
12	98449055	HHCS, M10 X 1.5 X 55	2
13	93940000	LOCKWASHER, M10	6
14	RS0328	HHCS, 7/16-14 X 1.25	4
15	RS0330	HHCS, 7/16-14 X 1.75	4

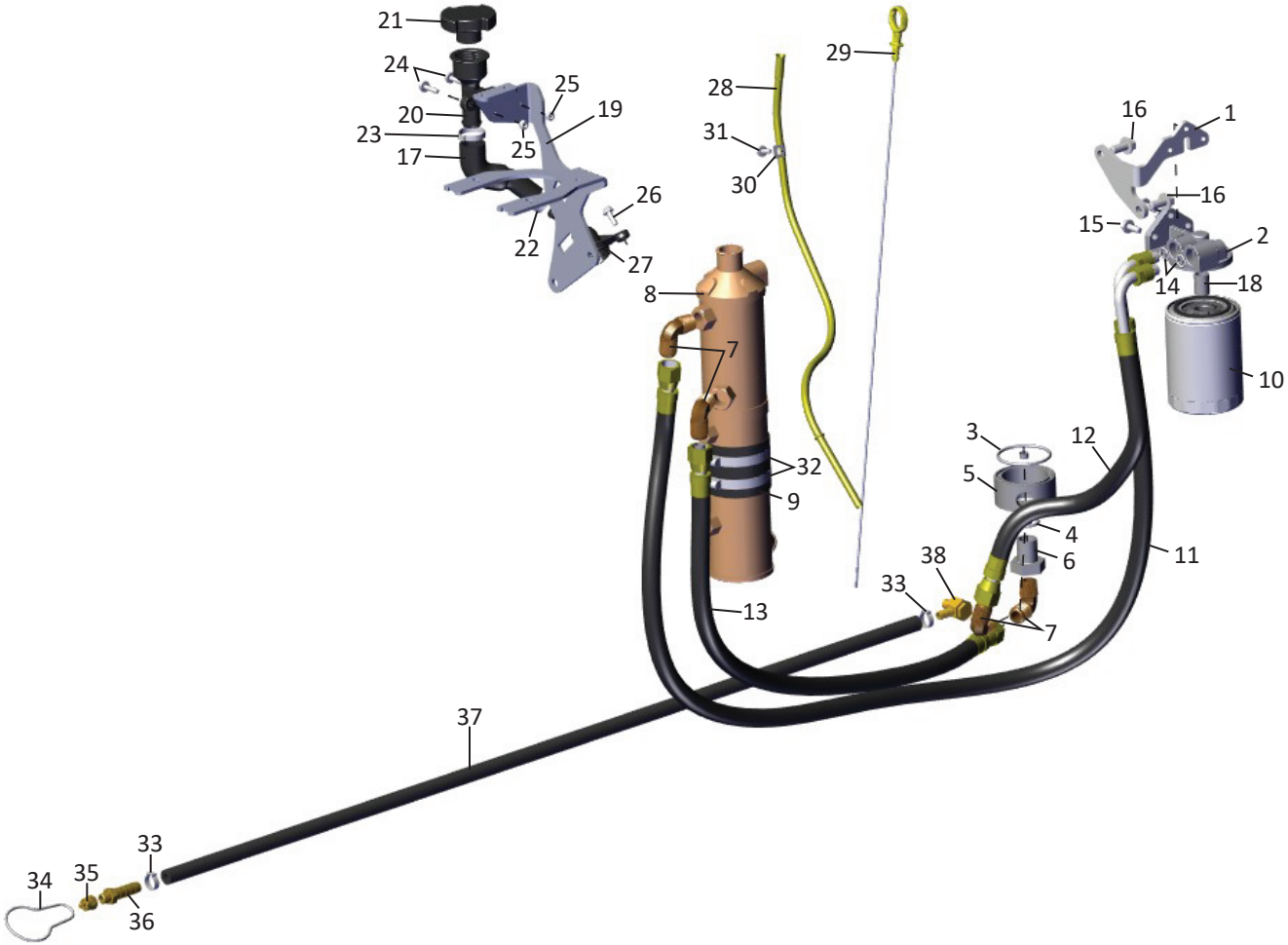

ITEM NO.	PARTNO	DESCRIPTION	QTY.	LENGTH (IN.)
1	R090482	BRKT, OIL HEADER	1	
2	R079066	REMOTE OIL FILTER HEAD	1	
3	R047240	O-RING, ROF ADAPTER	1	
4	R047202	O-RING	1	
5	R079067	OIL ADAPTER	1	
6	R079075	ADAPTER, OIL RETAINING NUT	1	
7	R024184	ELBOW, 1/2 NPT X 5/8 SAE 45 FITTING	4	
8	R147061	DUAL COOLER, 3"	1	
9	R094056	ISOLATOR, DUAL COOLER	1	
10	R077001	OIL FILTER, PCM	1	
11	RA045120I	HOSE ASSY, ROF	1	
12	RA045120H	HOSE ASSY, ROF	1	
13	RA045121C	HOSE ASSY, OIL	1	
14	R047245	O-RING, OIL HOSE	2	
15	98337020	FHCS, M8 X 1.25 X 20	3	
16	98447025	FHCS, M10 X 1.5 X 25	2	
17	R045251	HOSE, OIL FILL	1	
18	R024203	NIPPLE, FILTER ADAPTER	1	
19	R090487	BRKT, OIL FILL-DEGAS SUPPORT	1	
20	R034051	RISER, OIL FILL	1	
21	R034052	CAP, OIL FILL	1	
22	R127087G	CLAMP, OETIKER 1-1/16"	1	
23	R127087K	CLAMP, OETIKER 1-1/16"	1	
24	98222025	FHCS, M6 X 1.0 X 25	2	
25	97224300	LOCKNUT, NYLON, M6 X 1.0, SS	2	
26	98222020	FHCS, M6 X 1.0 X 20	1	
27	R024283	ADAPTER, OIL FILL	1	
28	R041108	DIPSTICK TUBE	1	
29	R041109	DIPSTICK	1	
30	R127065	CLAMP	1	
31	98222016	FHCS, M6 X 1.0 X 16	1	
32	RS3866	CLAMP, #52	2	
33	R127087C	CLAMP, OETIKER, 23/32"	2	
34	R190123	HOOK, CURTAIN	1	
35	R024066A	CAP, 1/4" NPT	1	
36	R024061	CONNECTOR, 1/4" NPT X 3/8" HOSE, STRAIGHT	1	
37	R045049	HOSE, 3/8" OIL RESISTANT BULK	1	48"
38	R024213	FITTING, BANJO, OIL DRAIN	1	

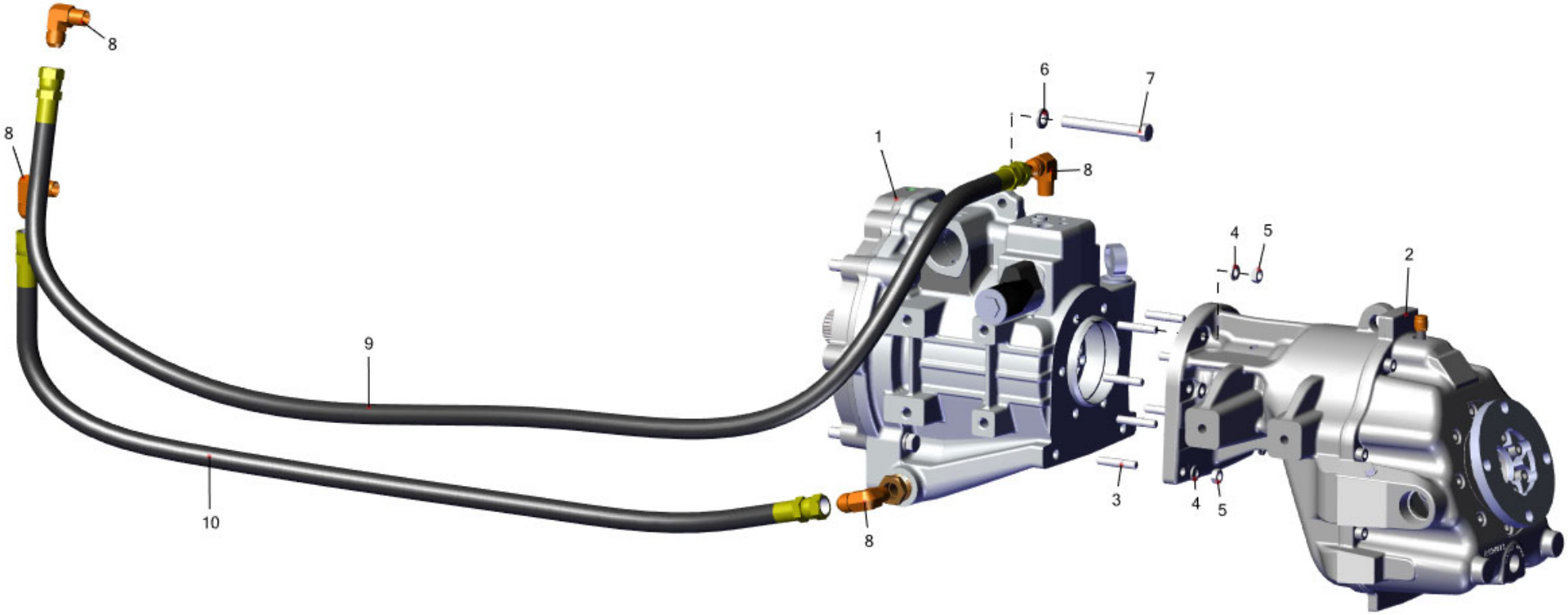

ITEM NO.	PARTNO	DESCRIPTION	QTY.
1	RA157025E	TRANSMISSION, 80S ELECTRIC	1
2	RA156011D	V-DRIVE, 1:48 RATIO	1
3	R031035	STUD, DOUBLE END, M8 X 1.25	8
4	RS2179	LOCKWASHER, 5/16	8

ITEM NO.	PARTNO	DESCRIPTION	QTY.
5	RS7026	HEX NUT, M8 X 1.25	8
6	RS2181	LOCKWASHER, 7/16	4
7	RS0337	HHCS, 7/16-14 X 3.50	4
8	R024010	ELBOW, 3/8 NPT X 1/2 SAE	4

ITEM NO.	PARTNO	DESCRIPTION	QTY.
9	RA045007V	HOSE, TRANSMISSION, 60"	1
10	RA045007W	HOSE, TRANSMISSION, 40.5"	1

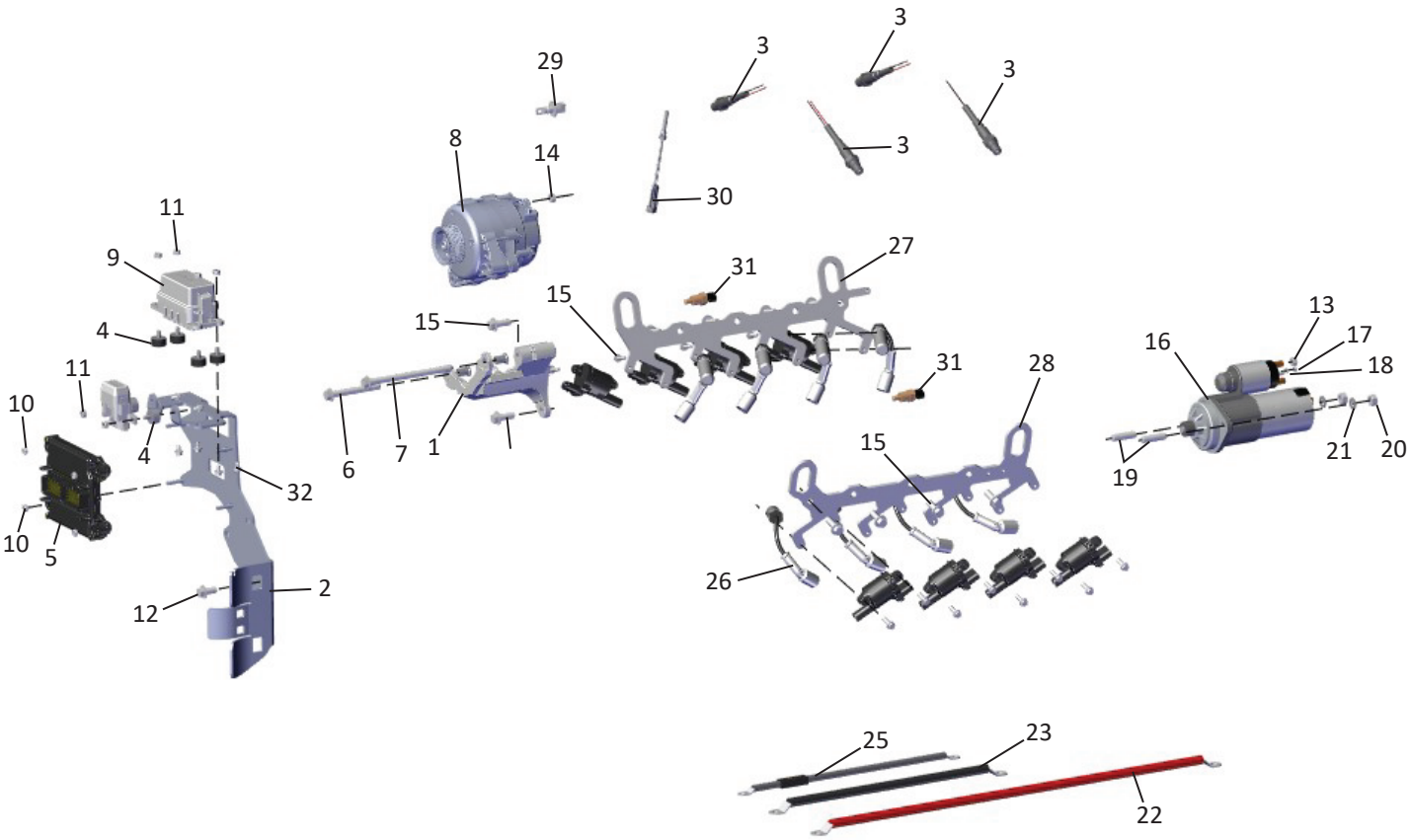

ITEM NO.	PARTNO	DESCRIPTION	QTY.
1	R090481A	BRKT, ALT, 6.0L, MACHINING	1
2	R090488	BRKT, ECM/FUSE BOX FW	1
3	R020051	SENSOR, O2	4
4	R094044	ISOLATOR, FUSE BOX	6
5	R116028B	ECM, 120 PIN	1
6	R009219	BOLT, ALT, SHORT	1
7	R009220	BOLT, ALT, LONG	1
8	RA097012	ALT, 120A REMY	1
9	RA121123B	WIRE HARNESS, 6.0l	1
10	97224300	LOCKNUT, NYLON, M6 X 1.0, SS	4
11	95104060	KEPS NUT, 1/4-20, SS	6
12	98447025	FHCS, M10 X 1.5 X 25	1
13	97330060	KEPS NUT, M8 X 1.25	2
14	97220060	NUT, KEPS, M6 X 1.0	1
15	98442030	FHCS, M10 X 1.5 X 30	10
16	RA122009	STARTER, TOP MOUNT	1
17	RS7036	HEX NUT, M5 X .8	1
18	93003000	LOCKWASHER, M5	1
19	R031018	STUD, 7/16-14	2
20	RS1029	HEX NUT, 7/16-14	2
21	RS2181	LOCKWASHER, 7/16	2
22	R101020	2/0 BATTERY LEAD, 28"	1
23	R101021	2/0 GROUND LEAD, 15"	1
25	R153022	FUSE LINE, 150 AMP 48"	1
26	RA120021	PLUG WIRE	8
27	R090484	BRKT, COIL/LIFTING EYE RH	1
28	R090485	BRKT, COIL, LIFTING EYE, LH	1
29	R020063	AIR TEMP SENDER	1
30	R020071	SENSOR, DEGAS COOLANT LEVEL	1
31	R020019	SENDER, TEMP	2
32	90124038	FHCS, .25-20 X .375, SS	6
NI	R121117	HARNESS, ELECT SHIFT ADAPTER	1

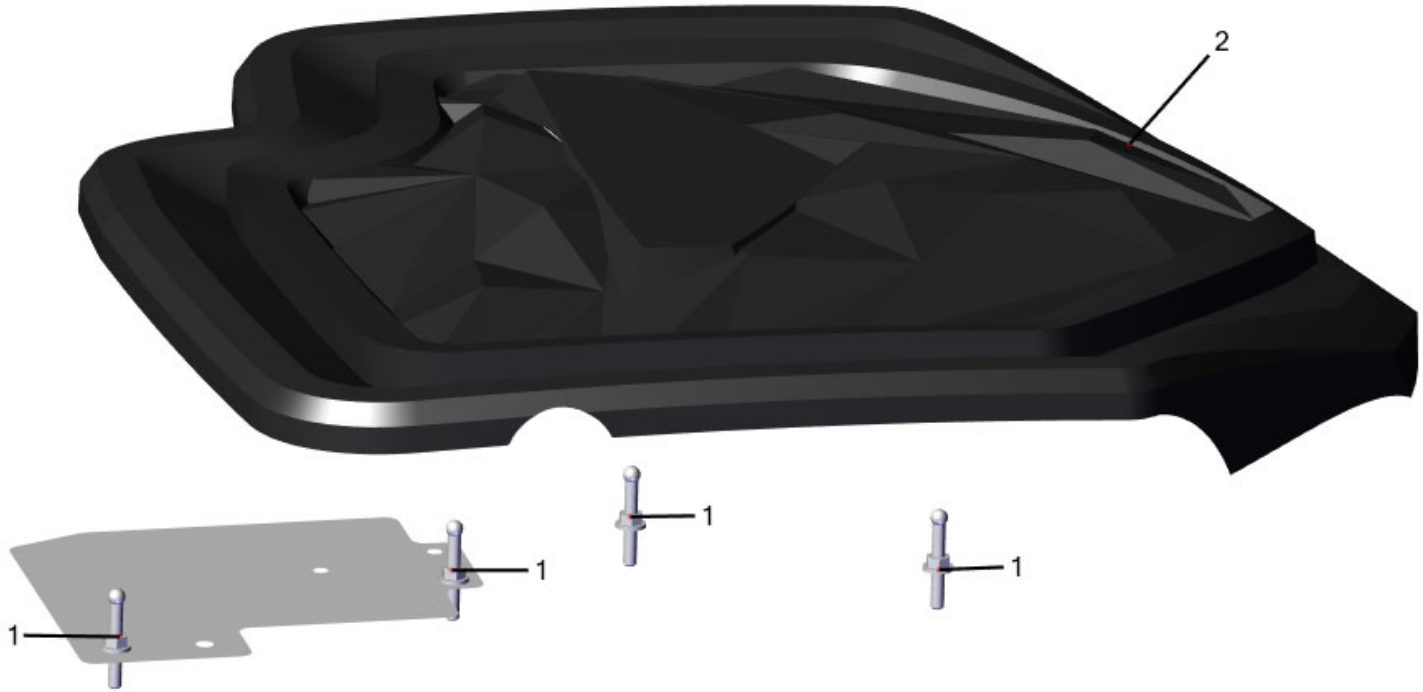

ITEM NO.	PartNo	DESCRIPTION	QTY.
1	R095044	STUD, HOOD RETAINING	4
2	R060110	HOOD, PCM 6.0L LSX NAUTIQUE SHORT	1

ITEM NO.	PartNo	DESCRIPTION	QTY.
1	R143183-XX	DECAL, CAT EMISS. 5.0L,5.7L,6.0L	1
2	R143211-XX	LABEL, EPA EMISSIONS	1
3	R143175	DECAL, "CAUTION HOT"	5
4	R143287	DECAL, CXS CATANIUM CHROMAX	2
5	R143155	DECAL, ANODE WARNING	1
6	R143156	DECAL, RAW WATER DRAIN	1
7	R143194	DECAL, EMISSIONS, 4 STAR	2
8	L190232	PRE-OPERATION CHECKLIST	1
9	R143161A	DECAL, EMISSION LABEL (CARB)	1
10	22289	TAG, OK FOR SHIPMENT	1
11	R143112E	DECAL, FCC	1

ITEM NO.	PartNo	DESCRIPTION	QTY.
12	R143114	DECAL, FCC FUEL LEAKAGE WARNING	1
13	STA-BIL	STA-BIL SUPPLIED DECAL	1
14	R143253	"TOP" INDICATOR	1
15	L510040	MANUAL, OWNER'S	1
16	22835	DECAL, BATTERY GROUND	2
17	R143295	DECAL, COOLANT FILL	1
18	R143288	DECAL, DEGAS/SPEC/DRAIN	1
19	R143001E	DECAL, SERIAL NUMBER	2
20	R143296	DECAL, WARNING "HOT"	1