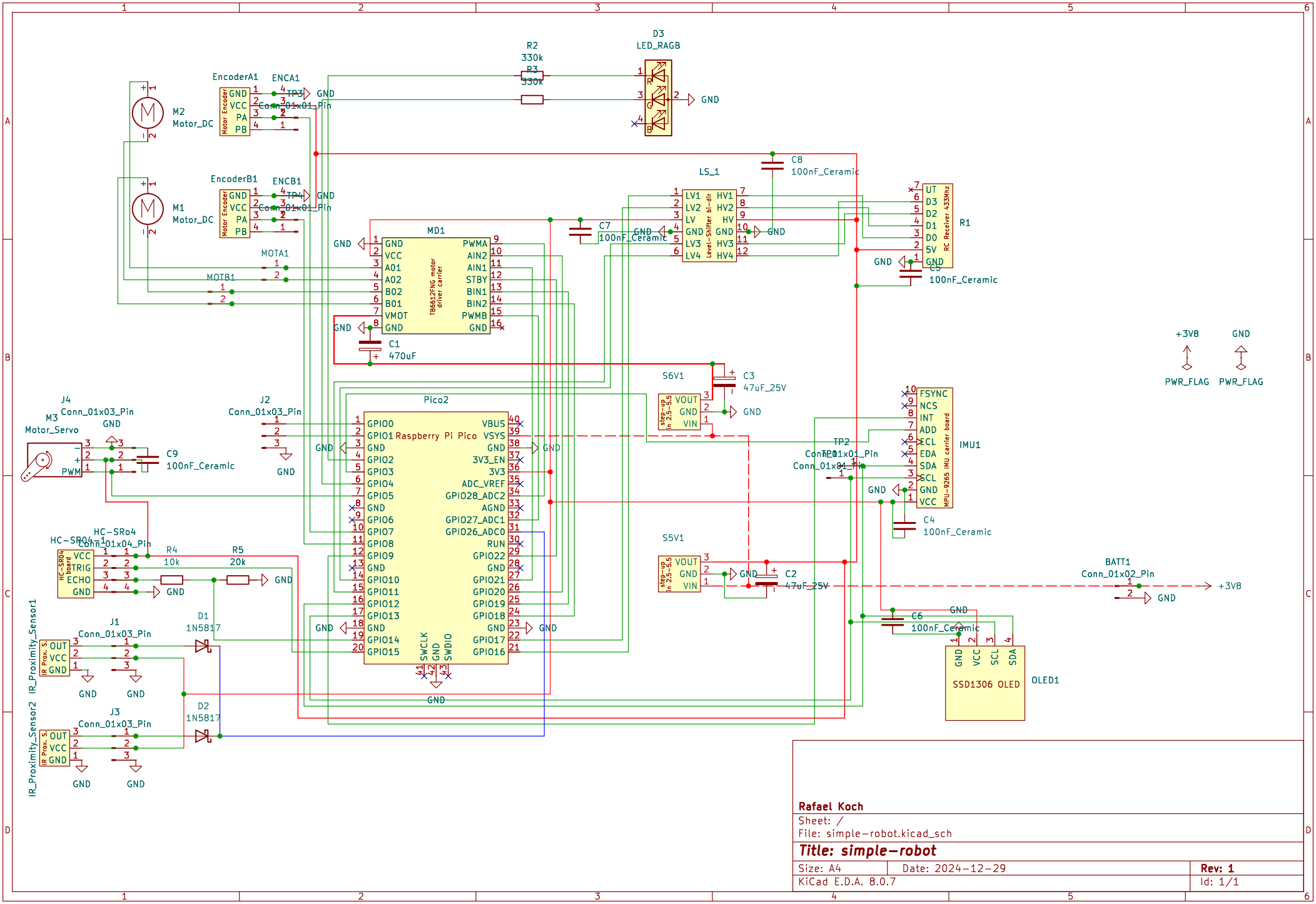

Rafael Koch

Sheet: /

File: simple-robot.kicad_sch

Title: simple-robot

Size: A4	Date: 2024-12-29	Rev: 1
KiCad E.D.A. 8.0.7		Id: 1/1