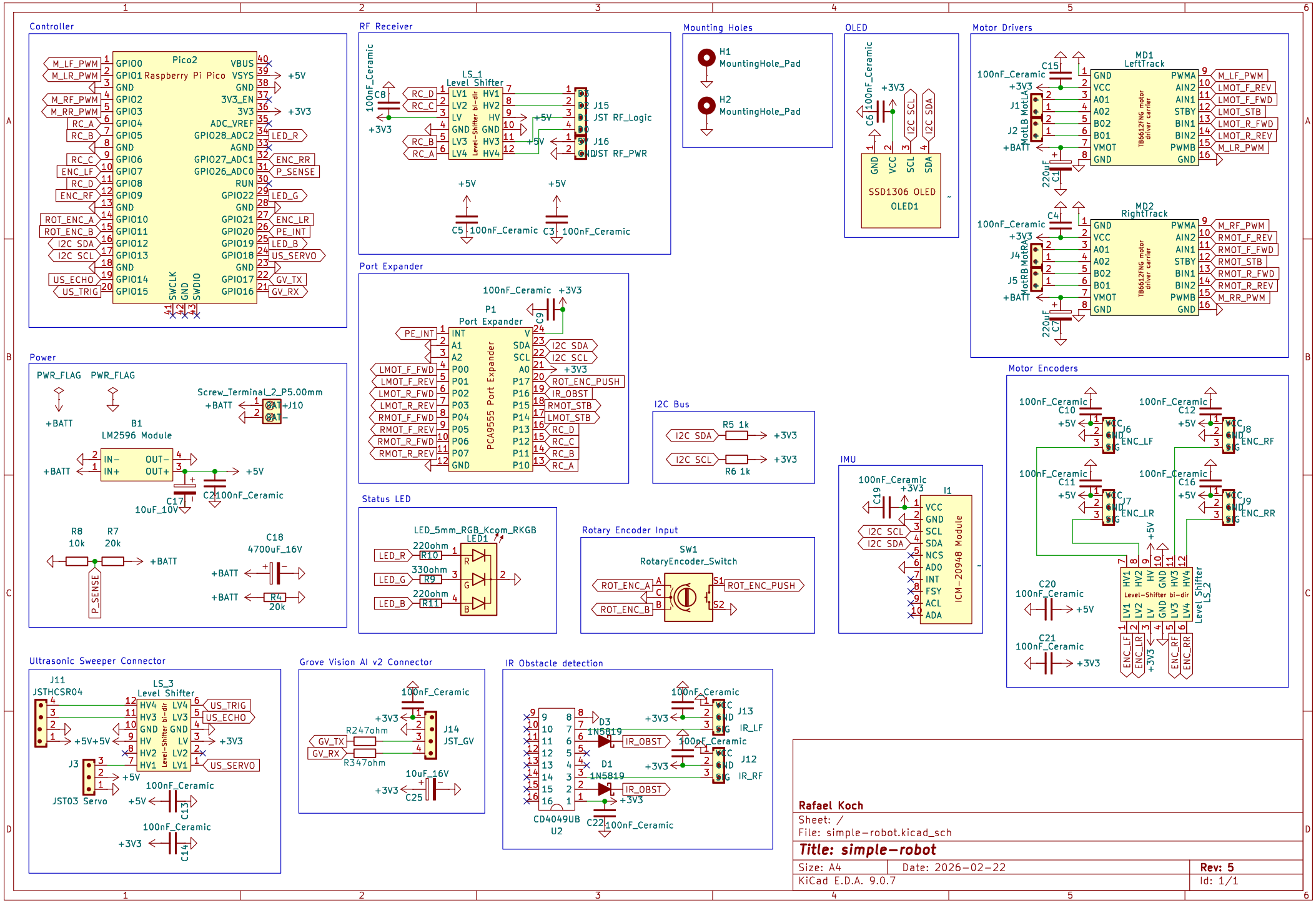
Controller
Pico2
Raspberry Pi Pico
RF Receiver
LS_1
Level Shifter
J15
JST RF_Logic
J16
JST RF_PWR
Mounting Holes
H1
MountingHole_Pad
H2
MountingHole_Pad
OLED
SSD1306 OLED
OLED1
Motor Drivers
MD1
LeftTrack
MD2
RightTrack
TB6612FNG motor driver carrier
Port Expander
P1
Port Expander
PCA9555 Port Expander
Power
PWR_FLAG
Screw_Terminal_2_P5.00mm
B1
LM2596 Module
I2C Bus
R5 1k
R6 1k
Status LED
LED_5mm_RGB_Kcom_RKGB
LED1
Rotary Encoder Input
SW1
RotaryEncoder_Switch
IMU
I1
ICM-20948 Module
Motor Encoders
J6
J7
J8
J9
Level Shifter
LS_2
Ultrasonic Sweeper Connector
J11
JSTHCSR04
LS_3
Level Shifter
J3
JST03 Servo
Grove Vision AI v2 Connector
J14
JST_GV
IR Obstacle detection
D3
1N5819
D1
1N5819
J13
J12
CD4049UB
U2
Rafael Koch
Sheet: /
File: simple-robot.kicad_sch
Title: simple-robot
Size: A4
Date: 2026-02-22
Rev: 5
KiCad E.D.A. 9.0.7
Id: 1/1