View from Top side

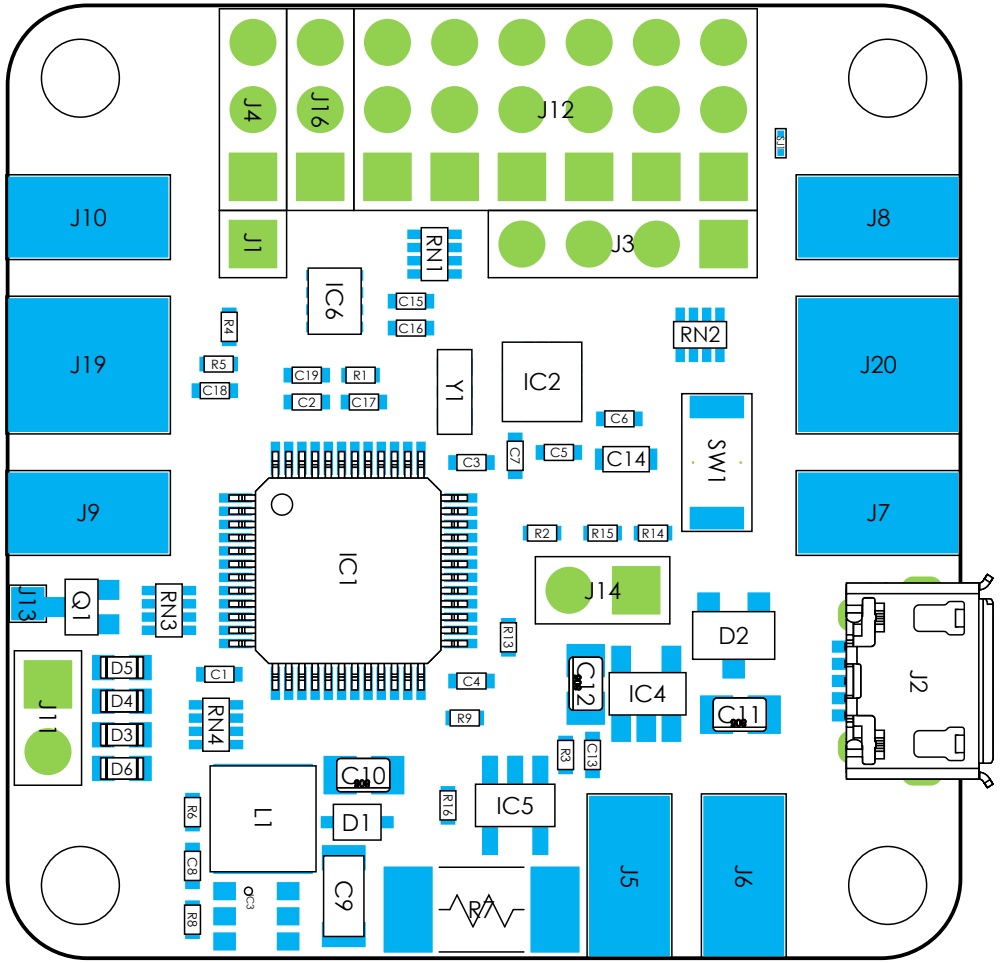

View from Bottom side (Scale 1:1)

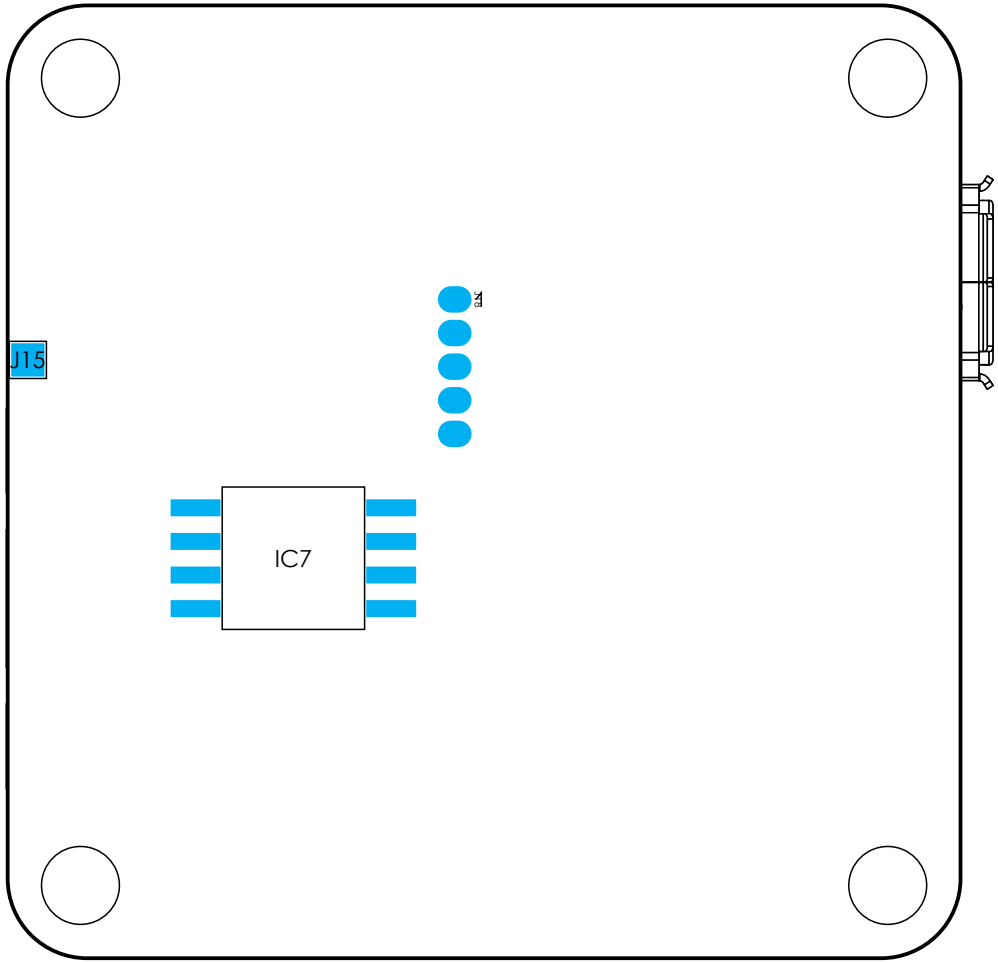

BY NC SA

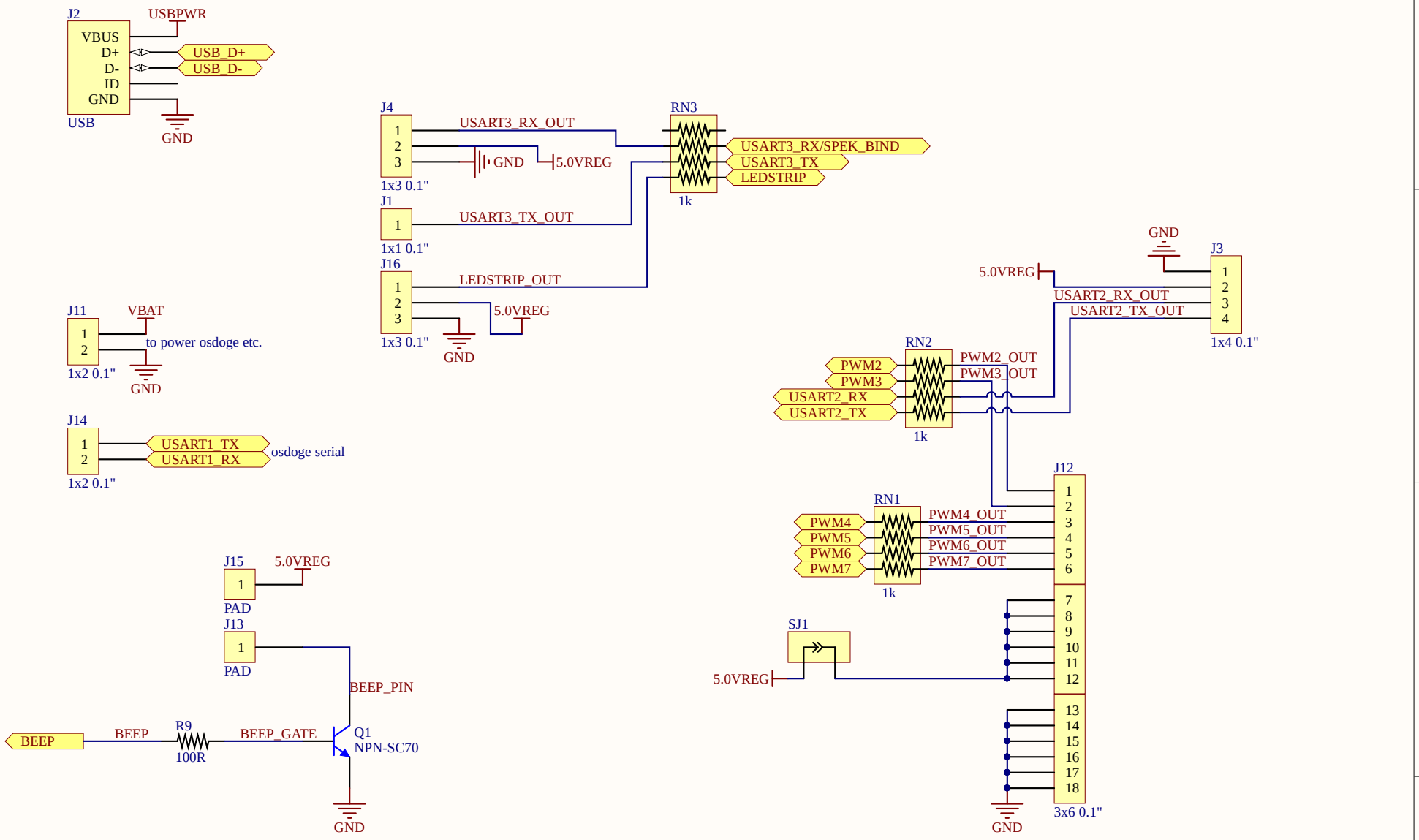
J2
USBPWR
VBUS
D+
D-
ID
GND
USB_D+
USB_D-
USB
GND
J4
USART3_RX_OUT
GND
5.0VREG
1x3 0.1"
RN3
USART3_RX/SPEK_BIND
USART3_TX
LEDSTRIP
1k
J1
USART3_TX_OUT
1x1 0.1"
J16
LEDSTRIP_OUT
5.0VREG
1x3 0.1"
GND
J11
VBAT
to power osdoge etc.
1x2 0.1"
GND
J14
USART1_TX
USART1_RX
osdoge serial
1x2 0.1"
J15
5.0VREG
PAD
J13
PAD
BEEP_PIN
BEEP
BEEP
R9
100R
BEEP_GATE
Q1
NPN-SC70
GND
GND
J3
5.0VREG
USART2_RX_OUT
USART2_TX_OUT
1x4 0.1"
RN2
PWM2
PWM3
USART2_RX
USART2_TX
PWM2_OUT
PWM3_OUT
1k
J12
RN1
PWM4
PWM5
PWM6
PWM7
PWM4_OUT
PWM5_OUT
PWM6_OUT
PWM7_OUT
1k
SJ1
5.0VREG
GND
3x6 0.1"

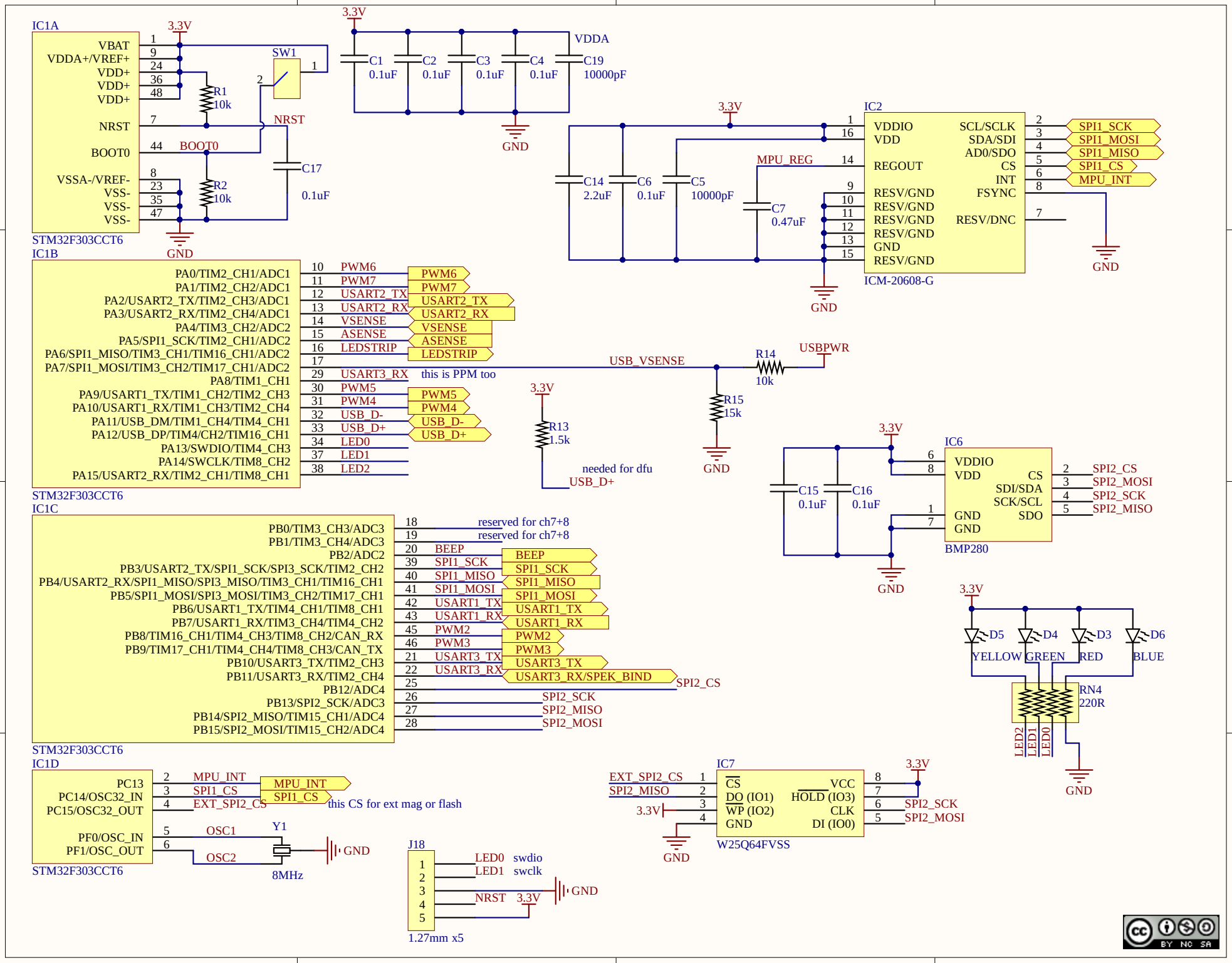
IC1A
STM32F303CCT6
VBAT
VDDA+/VREF+
VDD+
VDD+
VDD+
NRST
BOOT0
VSSA-/VREF-
VSS-
VSS-
VSS-
3.3V
SW1
R1 10k
R2 10k
BOOT0
NRST
C17 0.1uF
GND
C1 0.1uF
C2 0.1uF
C3 0.1uF
C4 0.1uF
C19 10000pF
VDDA
IC2
ICM-20608-G
VDDIO
VDD
REGOUT
RESV/GND
GND
SCL/SCLK
SDA/SDI
AD0/SDO
CS
INT
FSYNC
RESV/DNC
MPU_REG
C14 2.2uF
C6 0.1uF
C5 10000pF
C7 0.47uF
SPI1_SCK
SPI1_MOSI
SPI1_MISO
SPI1_CS
MPU_INT
IC1B
STM32F303CCT6
PA0/TIM2_CH1/ADC1
PA1/TIM2_CH2/ADC1
PA2/USART2_TX/TIM2_CH3/ADC1
PA3/USART2_RX/TIM2_CH4/ADC1
PA4/TIM3_CH2/ADC2
PA5/SPI1_SCK/TIM2_CH1/ADC2
PA6/SPI1_MISO/TIM3_CH1/TIM16_CH1/ADC2
PA7/SPI1_MOSI/TIM3_CH2/TIM17_CH1/ADC2
PA8/TIM1_CH1
PA9/USART1_TX/TIM1_CH2/TIM2_CH3
PA10/USART1_RX/TIM1_CH3/TIM2_CH4
PA11/USB_DM/TIM1_CH4/TIM4_CH1
PA12/USB_DP/TIM4/CH2/TIM16_CH1
PA13/SWDIO/TIM4_CH3
PA14/SWCLK/TIM8_CH2
PA15/USART2_RX/TIM2_CH1/TIM8_CH1
PWM6
PWM7
USART2_TX
USART2_RX
VSENSE
ASENSE
LEDSTRIP
USART3_RX
this is PPM too
PWM5
PWM4
USB_D-
USB_D+
LED0
LED1
LED2
USB_VSENSE
R14 10k
USBPWR
R15 15k
3.3V
R13 1.5k
needed for dfu
USB_D+
IC6
BMP280
VDDIO
VDD
GND
GND
CS
SDI/SDA
SCK/SCL
SDO
SPI2_CS
SPI2_MOSI
SPI2_SCK
SPI2_MISO
C15 0.1uF
C16 0.1uF
IC1C
STM32F303CCT6
PB0/TIM3_CH3/ADC3
PB1/TIM3_CH4/ADC3
PB2/ADC2
PB3/USART2_TX/SPI1_SCK/SPI3_SCK/TIM2_CH2
PB4/USART2_RX/SPI1_MISO/SPI3_MISO/TIM3_CH1/TIM16_CH1
PB5/SPI1_MOSI/SPI3_MOSI/TIM3_CH2/TIM17_CH1
PB6/USART1_TX/TIM4_CH1/TIM8_CH1
PB7/USART1_RX/TIM3_CH4/TIM4_CH2
PB8/TIM16_CH1/TIM4_CH3/TIM8_CH2/CAN_RX
PB9/TIM17_CH1/TIM4_CH4/TIM8_CH3/CAN_TX
PB10/USART3_TX/TIM2_CH3
PB11/USART3_RX/TIM2_CH4
PB12/ADC4
PB13/SPI2_SCK/ADC3
PB14/SPI2_MISO/TIM15_CH1/ADC4
PB15/SPI2_MOSI/TIM15_CH2/ADC4
reserved for ch7+8
reserved for ch7+8
BEEP
SPI1_SCK
SPI1_MISO
SPI1_MOSI
USART1_TX
USART1_RX
PWM2
PWM3
USART3_TX
USART3_RX
USART3_RX/SPEK_BIND
SPI2_CS
SPI2_SCK
SPI2_MISO
SPI2_MOSI
D5 YELLOW
D4 GREEN
D3 RED
D6 BLUE
RN4 220R
LED2
LED1
LED0
IC1D
STM32F303CCT6
PC13
PC14/OSC32_IN
PC15/OSC32_OUT
PF0/OSC_IN
PF1/OSC_OUT
MPU_INT
SPI1_CS
EXT_SPI2_CS
this CS for ext mag or flash
OSC1
OSC2
Y1
8MHz
IC7
W25Q64FVSS
EXT_SPI2_CS
SPI2_MISO
CS
DO (IO1)
WP (IO2)
GND
VCC
HOLD (IO3)
CLK
DI (IO0)
SPI2_SCK
SPI2_MOSI
J18
1.27mm x5
LED0 swdio
LED1 swclk
NRST 3.3V

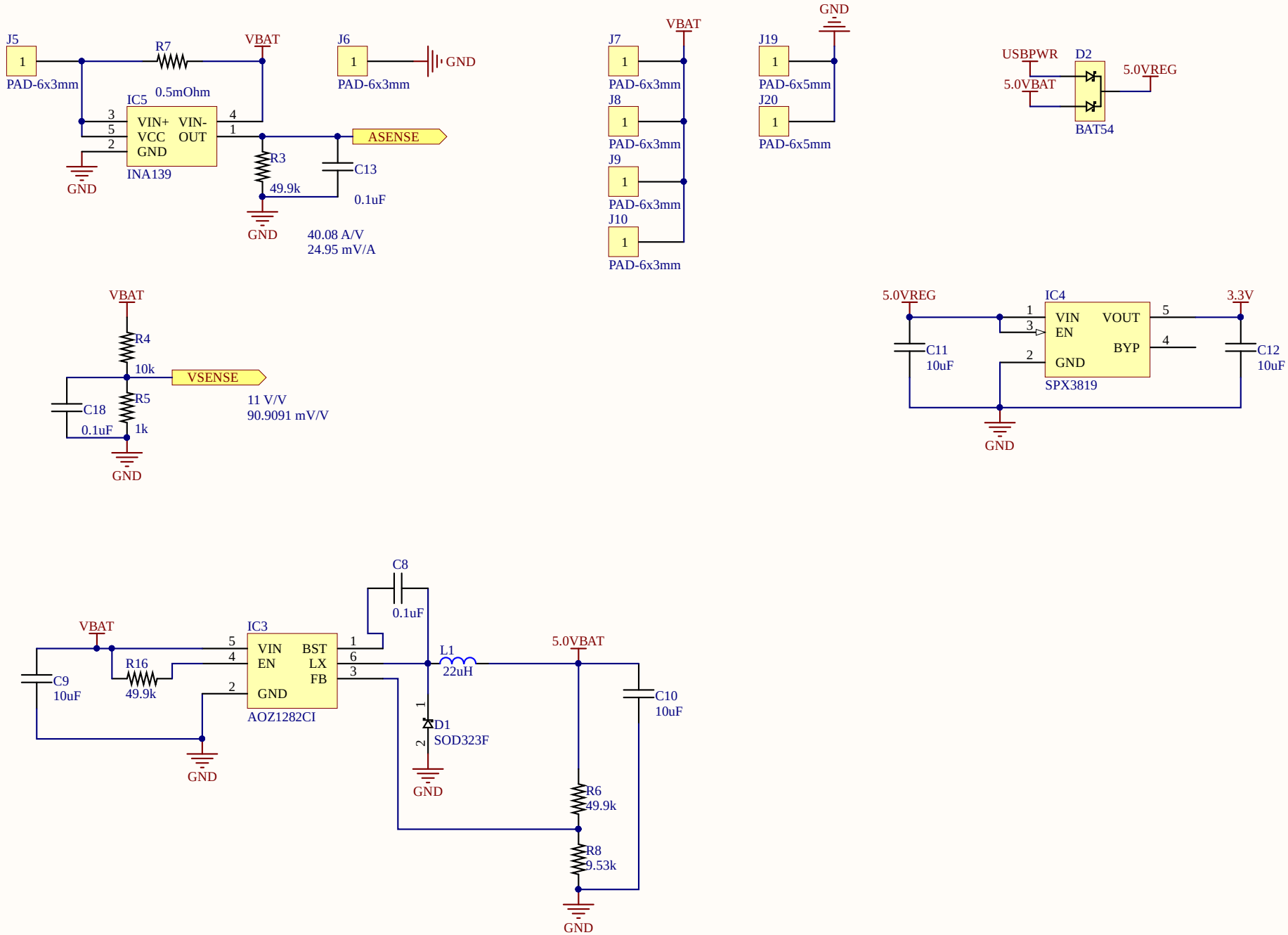
J5
PAD-6x3mm
R7
0.5mOhm
VBAT
IC5
VIN+ VIN-
VCC OUT
GND
INA139
GND
J6
PAD-6x3mm
GND
ASENSE
R3
49.9k
C13
0.1uF
GND
40.08 A/V
24.95 mV/A
VBAT
J7
PAD-6x3mm
J8
PAD-6x3mm
J9
PAD-6x3mm
J10
PAD-6x3mm
GND
J19
PAD-6x5mm
J20
PAD-6x5mm
USBPWR
D2
5.0VREG
5.0VBAT
BAT54
VBAT
R4
10k
VSENSE
R5
1k
C18
0.1uF
GND
11 V/V
90.9091 mV/V
5.0VREG
IC4
VIN VOUT
EN
BYP
GND
SPX3819
3.3V
C11
10uF
C12
10uF
GND
C8
0.1uF
VBAT
IC3
VIN BST
EN LX
FB
GND
AOZ1282CI
R16
49.9k
C9
10uF
GND
L1
22uH
5.0VBAT
D1
SOD323F
GND
C10
10uF
R6
49.9k
R8
9.53k
GND