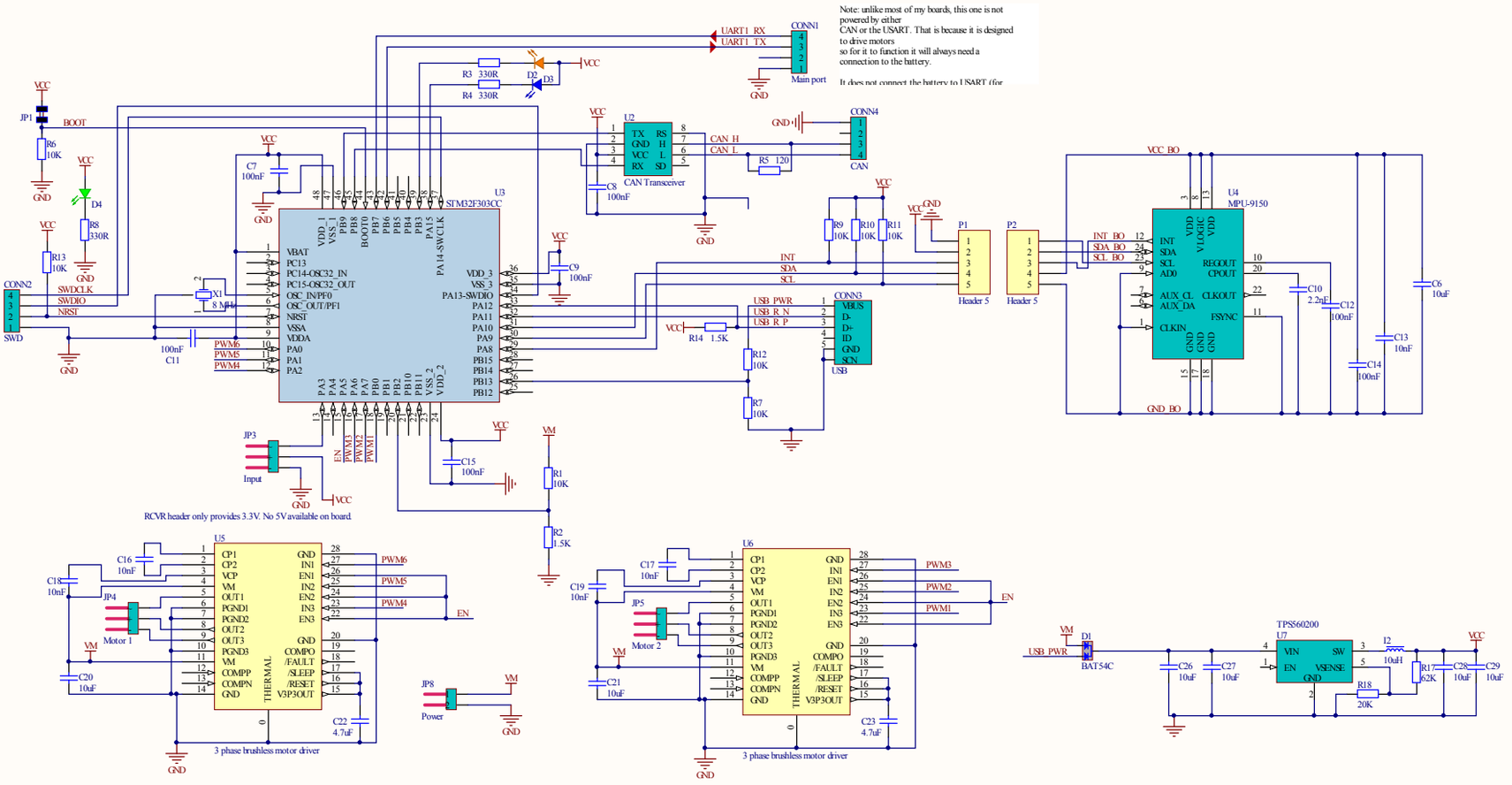
Note: unlike most of my boards, this one is not powered by either CAN or the USART. That is because it is designed to drive motors so for it to function it will always need a connection to the battery.
It does not connect the battery to USART (for
UART1_RX
UART1_TX
CONN1
Main port
R3 330R
R4 330R
D2
D3
JP1
BOOT
R6 10K
D4
R8 330R
R13 10K
CONN2
SWDIO
SWDCLK
NRST
SWD
C7 100nF
U3
STM32F303CC
X1 8 MHz
C11 100nF
PWM6
PWM5
PWM4
U2
CAN Transceiver
C8 100nF
CAN_H
CAN_L
R5 120
CONN4
CAN
C9 100nF
R9 10K
R10 10K
R11 10K
P1
Header 5
P2
Header 5
INT
SDA
SCL
USB_PWR
USB_R_N
USB_R_P
R14 1.5K
R12 10K
R7 10K
CONN3
USB
U4
MPU-9150
VCC_BO
GND_BO
INT_BO
SDA_BO
SCL_BO
C10 2.2nF
C12 100nF
C13 10nF
C14 100nF
C6 10uF
JP3
Input
EN
PWM3
PWM2
PWM1
C15 100nF
R1 10K
R2 1.5K
RCVR header only provides 3.3V. No 5V available on board.
U5
C16 10nF
C18 10nF
JP4
Motor 1
C20 10uF
C22 4.7uF
3 phase brushless motor driver
JP8
Power
U6
C17 10nF
C19 10nF
JP5
Motor 2
C21 10uF
C23 4.7uF
3 phase brushless motor driver
USB_PWR
D1
BAT54C
C26 10uF
C27 10uF
TPS560200
U7
L2 10uH
R17 62K
R18 20K
C28 10uF
C29 10uF
Title Sparky Brushless Gimbal Controller
Size: A3
Version: 1
Revision: 0.5
Date: 4/13/2015
Time: 1:40:16 PM
Sheet 1 of 1
File: SparkyBGC.SchDoc
Drawn by James Cotton
For Tau Labs

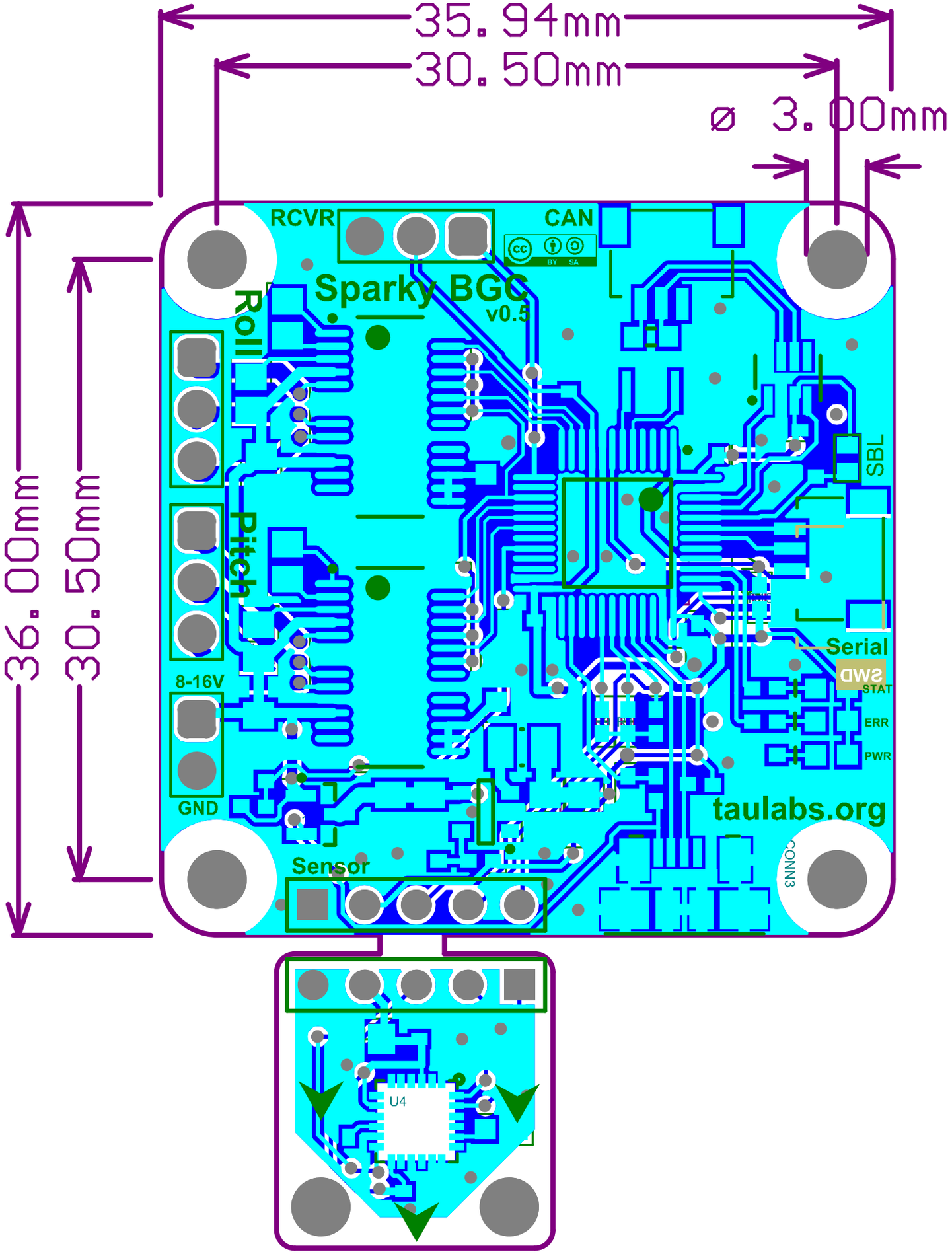
35.94mm
30.50mm
⌀ 3.00mm
36.00mm
30.50mm
RCVR
CAN
Sparky BGC
v0.5
Roll
Pitch
SBL
Serial
SWD
STAT
ERR
PWR
8-16V
GND
taulabs.org
Sensor
CONN3
U4