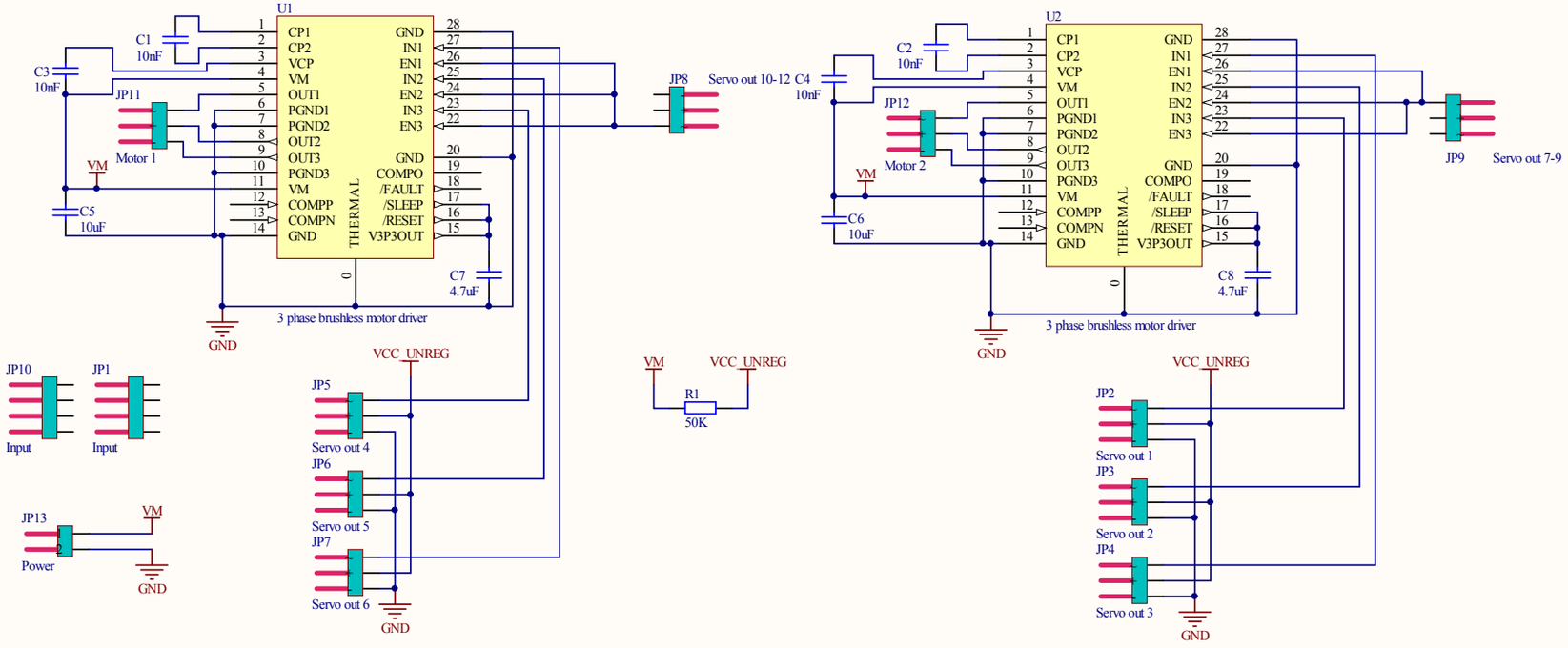

Title	*Sparky Brushless Gimbal Controller*		Drawn by James Cotton For Tau Labs
Size: A3	Version: 1	Revision: A	
Date: 9/3/2013	Time: 7:19:28 AM	Sheet 1 of 1	
File: SparkyBGC.SchDoc			