DOC. NAME	JKIT-128-1 CIRCUIT DIAGRAM	DOC. NUMBER	ATMEGA128	SHEET 1 OF 2

DRWN S. S. SHIN
DATE 2012.09.20
CHKD
APRD
REF
MAN
ISSUE 1
CONTENT

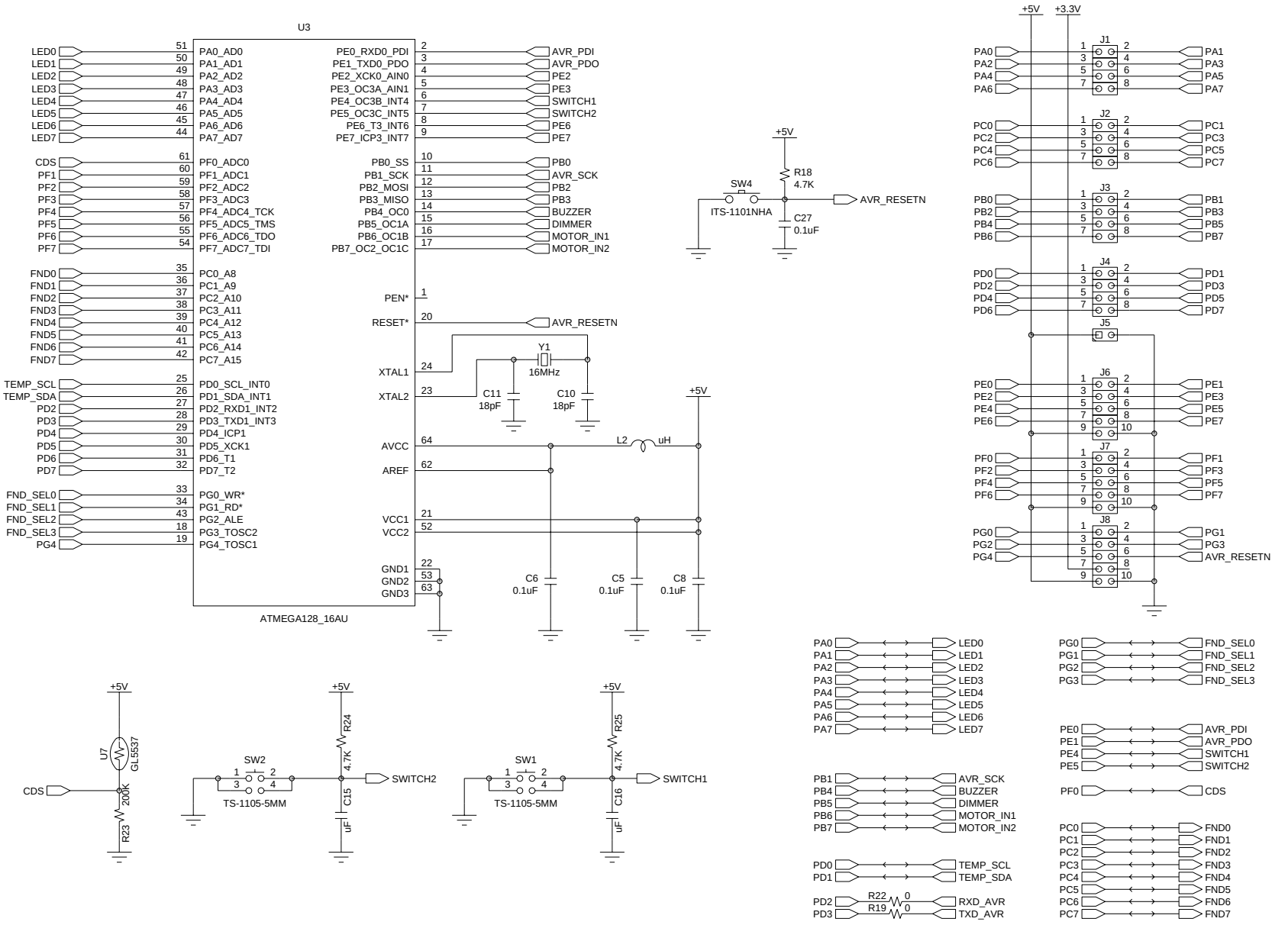

JCNET

DOC. NAME	JKIT-128-1 CIRCUIT DIAGRAM	DOC. NUMBER	ETC	SHEET 2 OF 2

DRWN
S. S. SHIN

DATE
2012.09.20

CHKD

APRD

REF

MAN

ISSUE
1

CONTENT

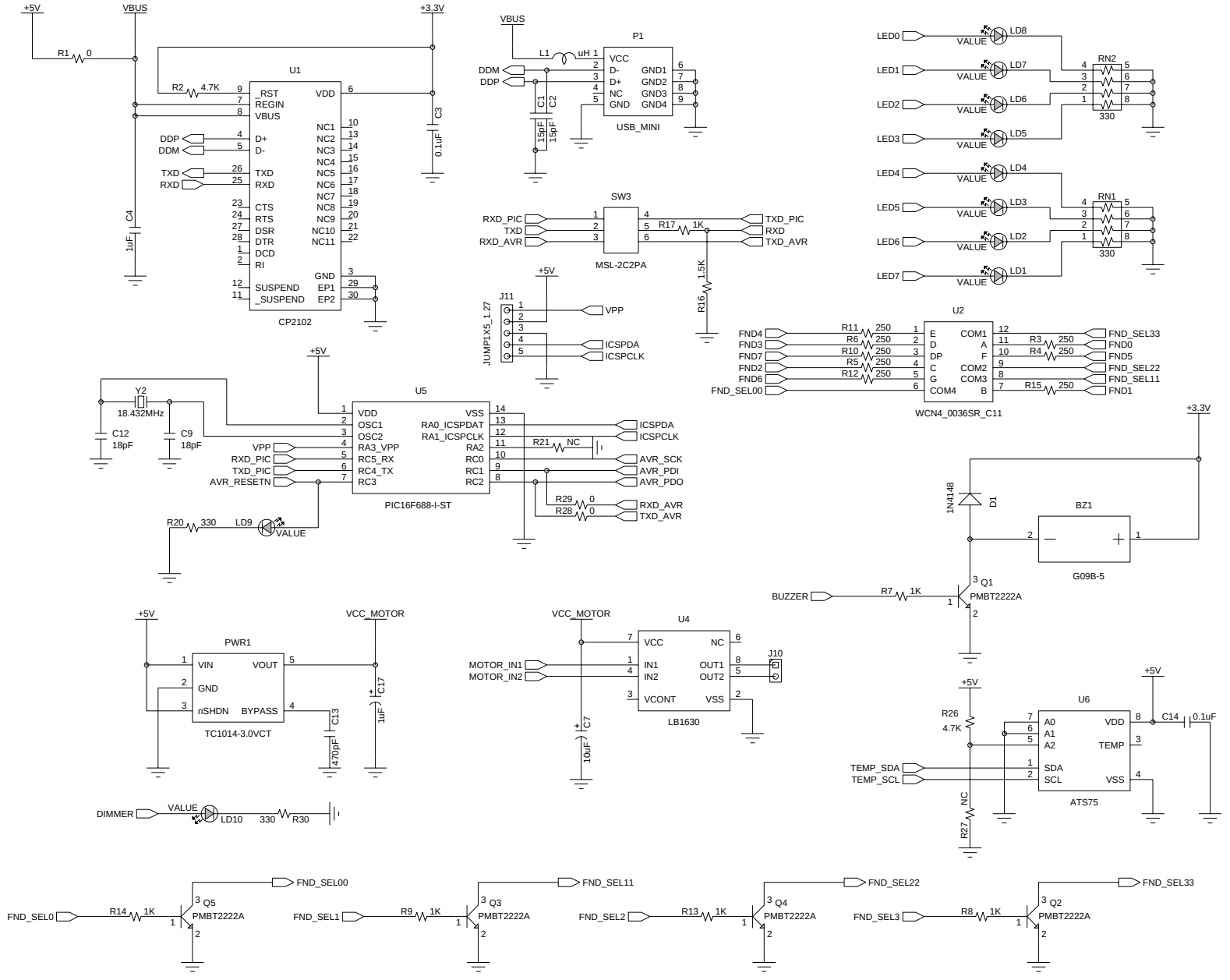

JCNET