Group: Chase Rodie, Lexie Reddon
CPE 301
12/15/23

Overview

The goal of this project is to create an evaporation cooling system (swamp cooler). We use this swamp cooler to monitor water levels, display temperature of the air and the humidity, control a fan motor, adjust vent angles, and record motor activity. We also used GPIO methods to set register pointers and pins manually instead of using library functions. The cooler cycled between states that were triggered by user inputs or certain events. There were 4 states that it had to cycle through: DISABLED, IDLE, ERROR, and RUNNING. All of these had different colored LEDs that were toggled on due to certain conditions being met. During the IDLE state, if the temperature was greater than the threshold, it would enter into the RUNNING state. Once the temperature was below the threshold, it would return to idle. If the cooler was in the running state but the water level was below the threshold, the cooler entered into the ERROR state.

Pictures:

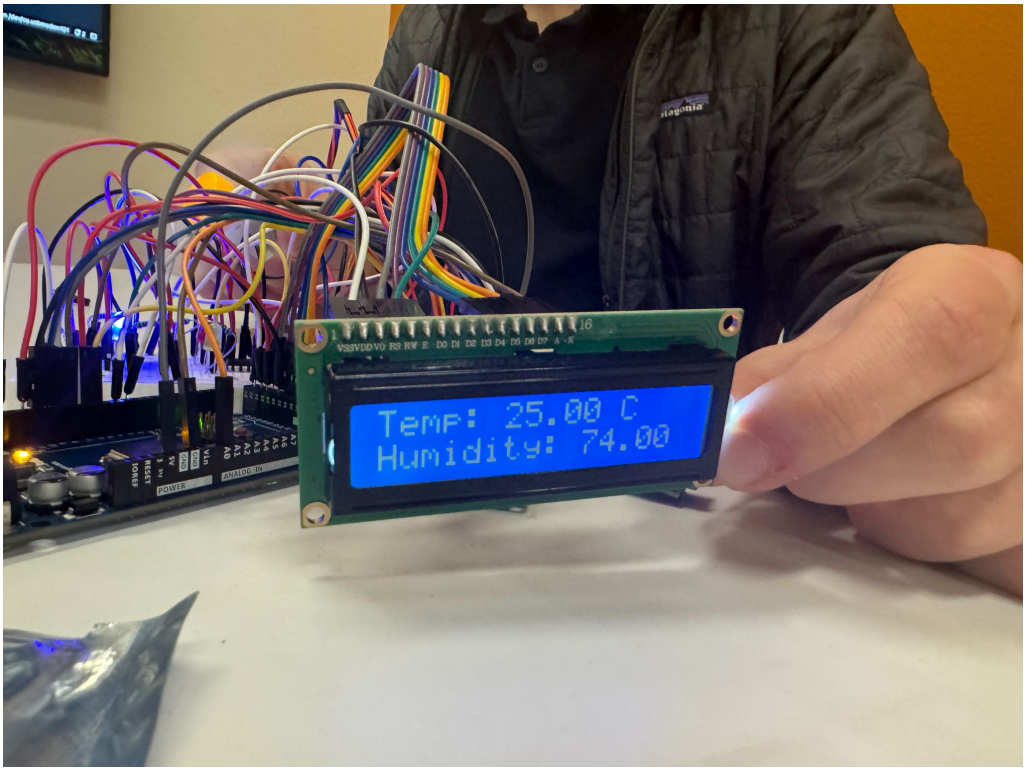

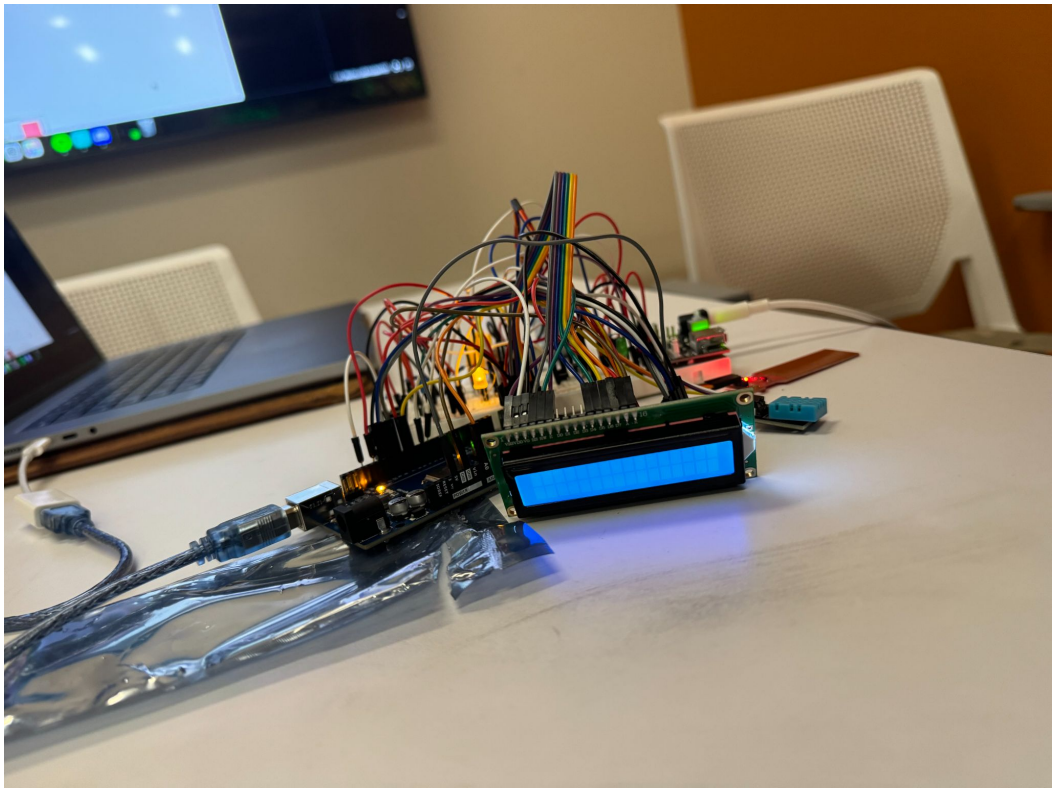

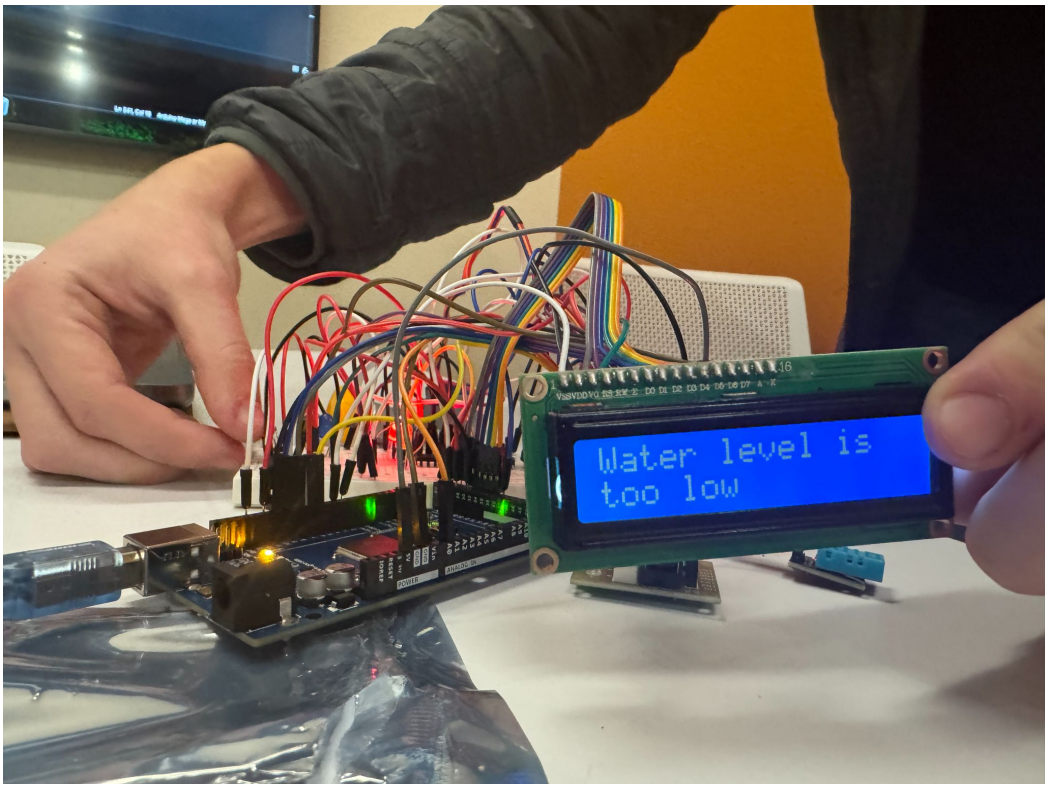
Water level is
too low

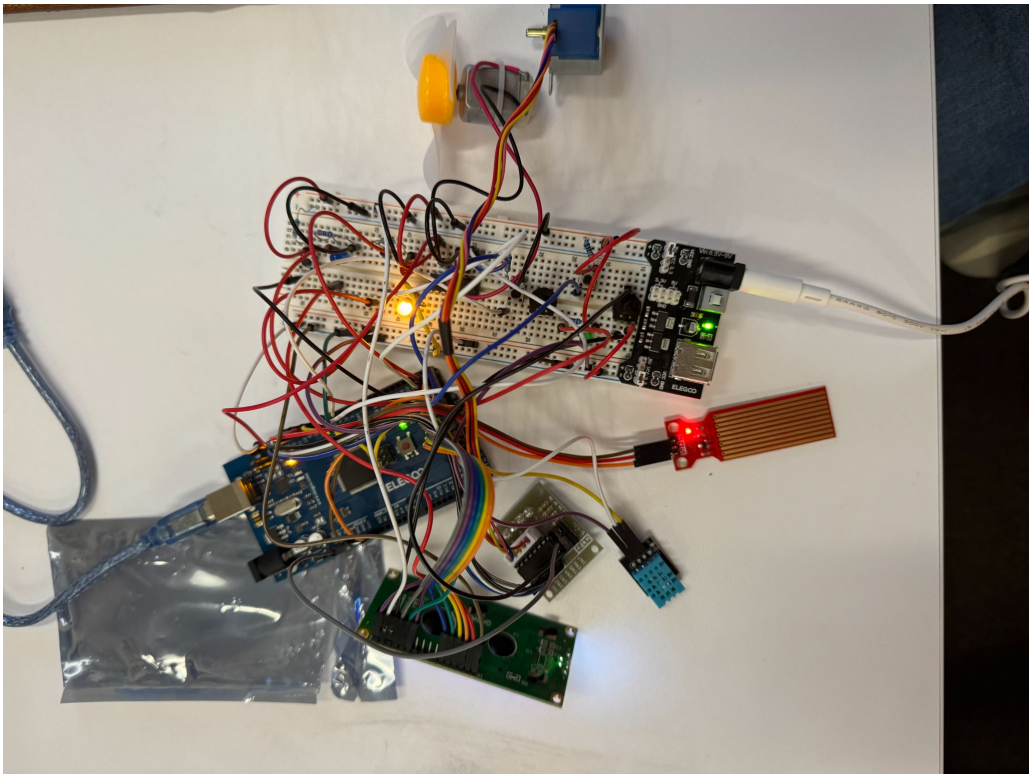
ELEGOO
ELEGOO

Schematic:

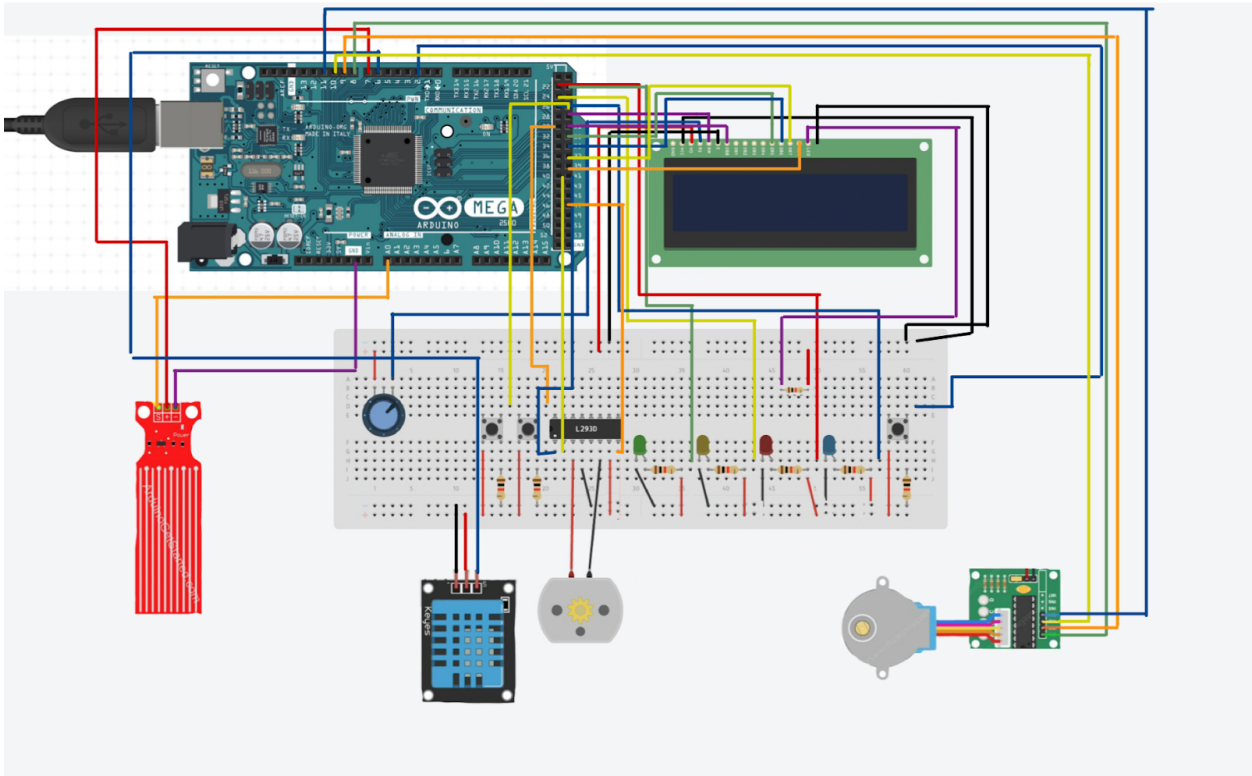

Specification Sheets:

DHT11 Temperature and Humidity Module
https://www.mouser.com/datasheet/2/758/DHT11-Technical-Data-Sheet-Translated-Version-n-1143054.pdf
LCD 1602 Module:
https://www.waveshare.com/datasheet/LCD_en_PDF/LCD1602.pdf
StepperMotor:
https://www.mouser.com/datasheet/2/758/stepd-01-data-sheet-1143075.pdf