ECE 3710: Intro to Telecom

Final Project: AM Radio

Tennessee Tech University

Electrical and Computer Engineering

Spring 2026

Due Date: May 6, 2026 at 11:59 PM

---

1 Overview & Instructions:

In this final project you will design, build, and test a short-range (near-field) amplitude modulation (AM) radio link operating in the 500–1500 kHz band. Each group will construct both a **transmitter** (T_x) circuit and a **receiver** (R_x) circuit on separate breadboards and establish a working wireless audio link across the bench. This project ties together core ECE 3710 topics including AM modulation/demodulation and resonant circuits.

Read all parts of this project handout *before* beginning construction. You will provide a working circuit demonstration during the lab session and upload a video demonstration to ILearn. Do not connect the ground rails of the (T_x) and (R_x) breadboards to each other — **the whole point is a *wireless* link!**

---

2 The Transmitter (T_x) Circuit:

The transmitter (T_x) uses a *series* RLC circuit to maximize current through the TX coil, which in turn maximizes the radiated magnetic field. First, you will create an air-core coil having a number of turns (N), a radius (a), and a length (ℓ).

2.1 Theoretical Inductance (Wheeler Formula):

To calculate the inductance of the TX coil, use the Wheeler formula:

$$L = \frac{10\pi\mu_0 a^2}{9a + 10\ell} N^2 \quad [\mathrm{H}] \tag{1}$$

where $\mu_0 \approx 1.2566 \times 10^{-6}$ H/m, a is the coil radius (m), ℓ is the coil length (m), and N is the number of turns. **Show your unit conversions and calculation in the space below:**

2.2 Measured Inductance:

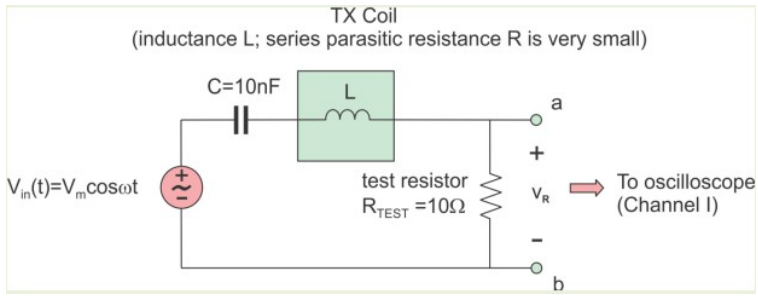

Figure 1: Series RLC Transmitter Test Circuit for Inductance Measurement.

Construct the series RLC resonant circuit as shown in Figure 1 with a known test capacitor (C_k) and resistor ($R_k = 10\Omega$). Using a function generator to drive the circuit, monitor the voltage across the resistor using Channel 1 of the oscilloscope. Find the resonant frequency f_0 where the resistor voltage is at its maximum. Then, calculate the inductance:

$$L_{\text{meas}} = \frac{1}{C_k\,(2\pi f_0)^2} \tag{2}$$

Record your values below. **Use L_{meas} for all subsequent calculations.**

f_0 **(kHz)**	L_{meas} **(μH)**	**% Error**

2.3 Transmitter Frequency & Capacitor Selection:

To reduce interference, each group will operate at a unique center frequency:

$$f_{T_x} = 600\,\text{kHz} + 50\,\text{kHz} \times (\text{group number} - 1) \tag{3}$$

Calculate the capacitance C_{T_x} needed to achieve resonance at your assigned f_{T_x}. Construct the value using the provided capacitors (series/parallel combinations).

f_{T_x} **(kHz)**	L_{T_x} **(μH)**	C_{T_x} **(nF)**

2.4 Assembling and Verifying the TX Circuit:

Assemble the TX circuit as shown in Figure 2. This circuit consists of the function generator, the transmitter coil (L_{T_x}), your calculated capacitance (C_{T_x}), and the $10\,\Omega$ series resistor.

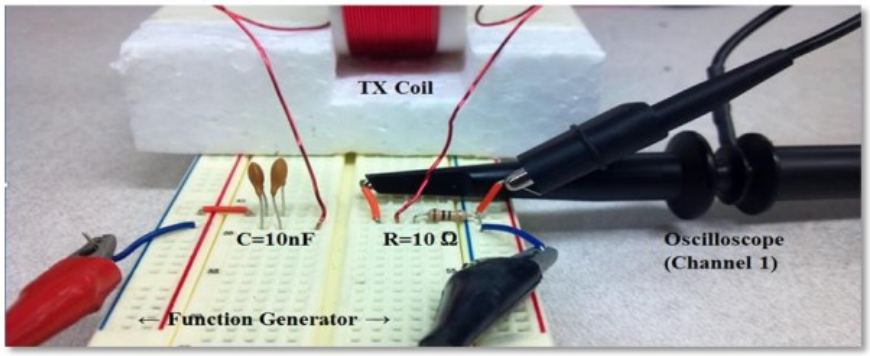

Figure 2: Breadboard Assembly of the Series RLC Transmitter Circuit.

Sweep the function generator frequency around your assigned f_{T_x}. Monitor the voltage across the $10\,\Omega$ resistor; you should see a clear voltage peak when the generator frequency matches the resonant frequency of your LC pair. Confirm that this resonance occurs within $\pm 5\%$ of your target f_{T_x}.

3 AM Modulation and Demodulation:

The AM signal you will transmit is defined by:

$$\phi(t) = \left[A_c + m(t)\right] \cos(\omega_c t) \tag{4}$$

where $m(t)$ is the modulating (audio) signal and $\cos(\omega_c t)$ is the high-frequency carrier at frequency f_{T_x}. For a single-tone message:

$$m(t) = A_m \cos(\omega_m t), \quad \omega_m \ll \omega_c \tag{5}$$

The modulation index is defined as $\mu = A_m/A_c$. When $\mu = 1$ (or 100%), the envelope just touches the zero-axis. As illustrated in Figure 3, the message $m(t)$ is encoded as the "envelope" or shape of the high-frequency carrier.

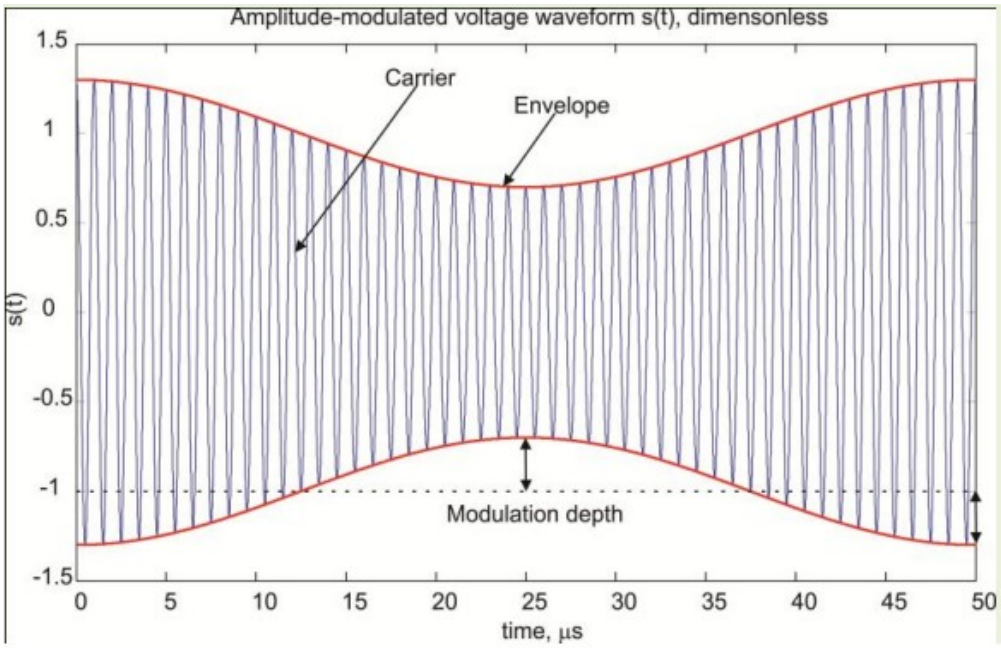

Figure 3: Time-domain Representation of an AM Signal Showing the Message Envelope.

In this lab, the modulated signal $\phi(t)$ is generated by the function generator. An audio signal from your computer or phone is fed into the **External Modulation Input** on the rear of the device. The carrier frequency will be set to your group's specific f_{T_x}, and the modulation index should be set to 100% (adjusting phone volume as needed to prevent distortion).

4 The Receiver (R_x) Circuit:

4.1 The Receiver Antenna & Tank Circuit:

The receiver uses a *parallel* LC circuit (tank circuit) to select the desired frequency band and maximize the voltage across the ferrite rod antenna. Based on the resonance physics discussed in Section 2, by tuning the receiver's variable capacitor (C_{R_x}), you can select your transmitter's specific frequency.

This parallel LC circuit is followed by an **envelope detector** (Germanium diode + RC filter) to extract the audio signal. As shown in the theory plot in Figure 4, the diode rectifies the signal while the RC constant is chosen to "track" the peaks of the carrier. The complete high-frequency RX circuit schematic is provided in Figure 5.

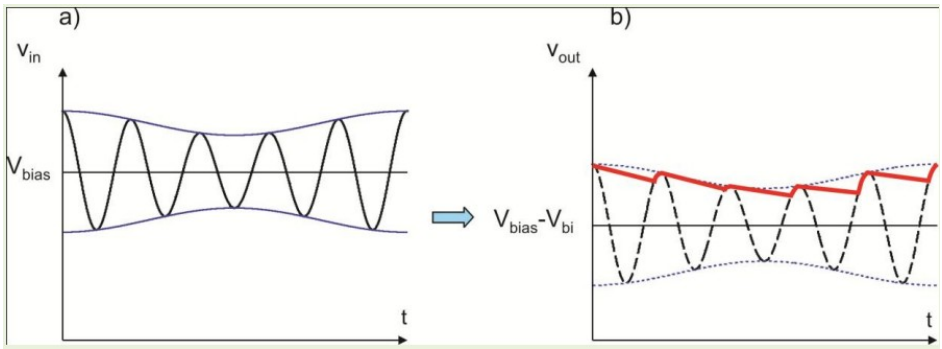

Figure 4: Theory of Envelope Detection: The RC Circuit Smooths the Rectified Carrier to Recover the Message Signal.

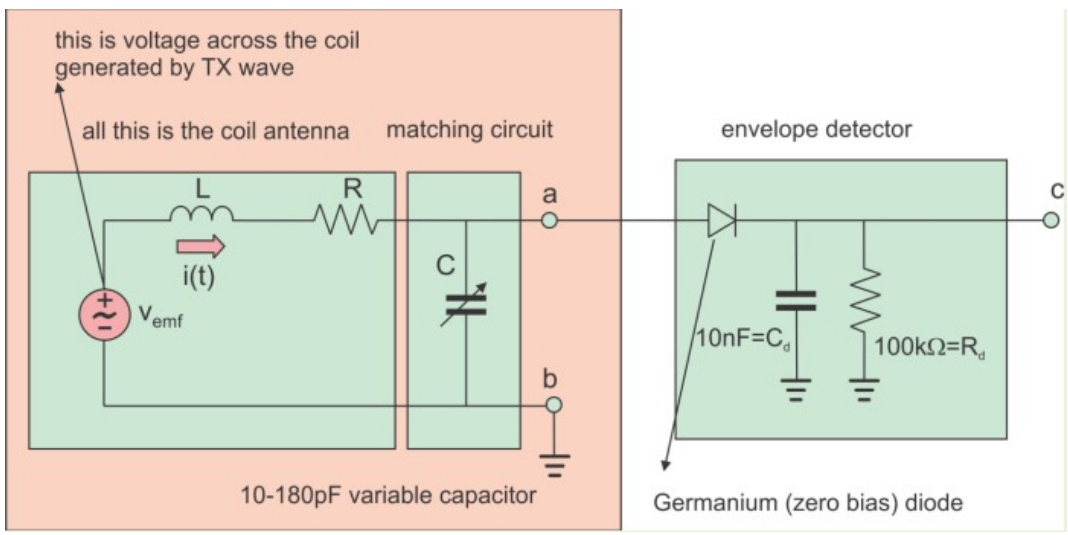

Figure 5: Passive Receiver Schematic: Parallel LC Tank and Envelope Detector.

4.2 Assembling the RX Circuit:

On a second breadboard, build the RX circuit. This stage is entirely passive — no power supply is needed. Use Figure 6 as a guide for your initial breadboard layout. Figure 7 illustrates the same circuit moved to a soldered protoboard. Notice how the compact layout and soldered connections help reduce parasitic capacitance and improve tuning stability.

1. Place the ferrite-core RX coil and the 10–200 pF variable capacitor in parallel to form the tank circuit.

2. Connect the Germanium diode (look for the clear glass body) in series with the tank output.

3. Connect the filter network ($C_d = 10\,\text{nF}$ and $R_d = 100\,\text{k}\Omega$) in parallel to ground.
4. **Note:** Handle the RX coil leads gently; they are fragile and break easily at the base.

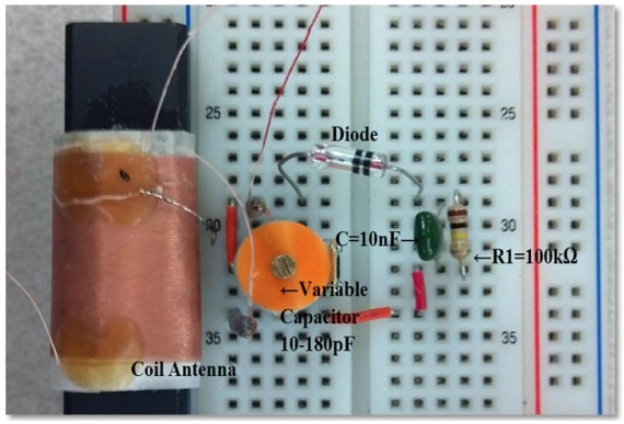

Figure 6: Breadboard Assembly of the Passive Receiver (LC Tank + Envelope Detector).

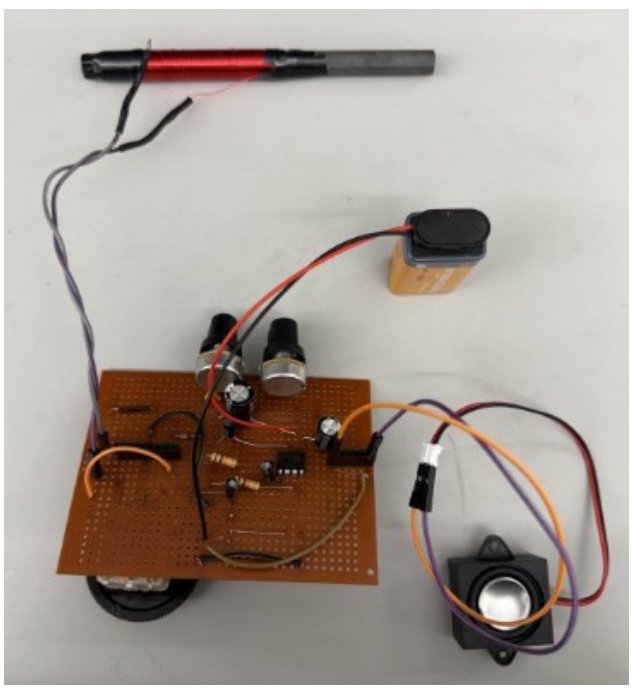

Figure 7: Permanent Version of the RX Circuit on a Soldered Protoboard.

5 The Complete Receiver (R_x) Circuit with Audio Amplifier:

5.1 Audio Power Amplifier Stage:

The LM386 is a low-power audio amplifier IC designed for battery-powered applications. By placing a 10 μF capacitor between pins 1 and 8, the internal voltage gain is set to 200. The total system integration—combining the Transmitter, Receiver, and Amplifier—is illustrated in the full schematic in Figure 8.

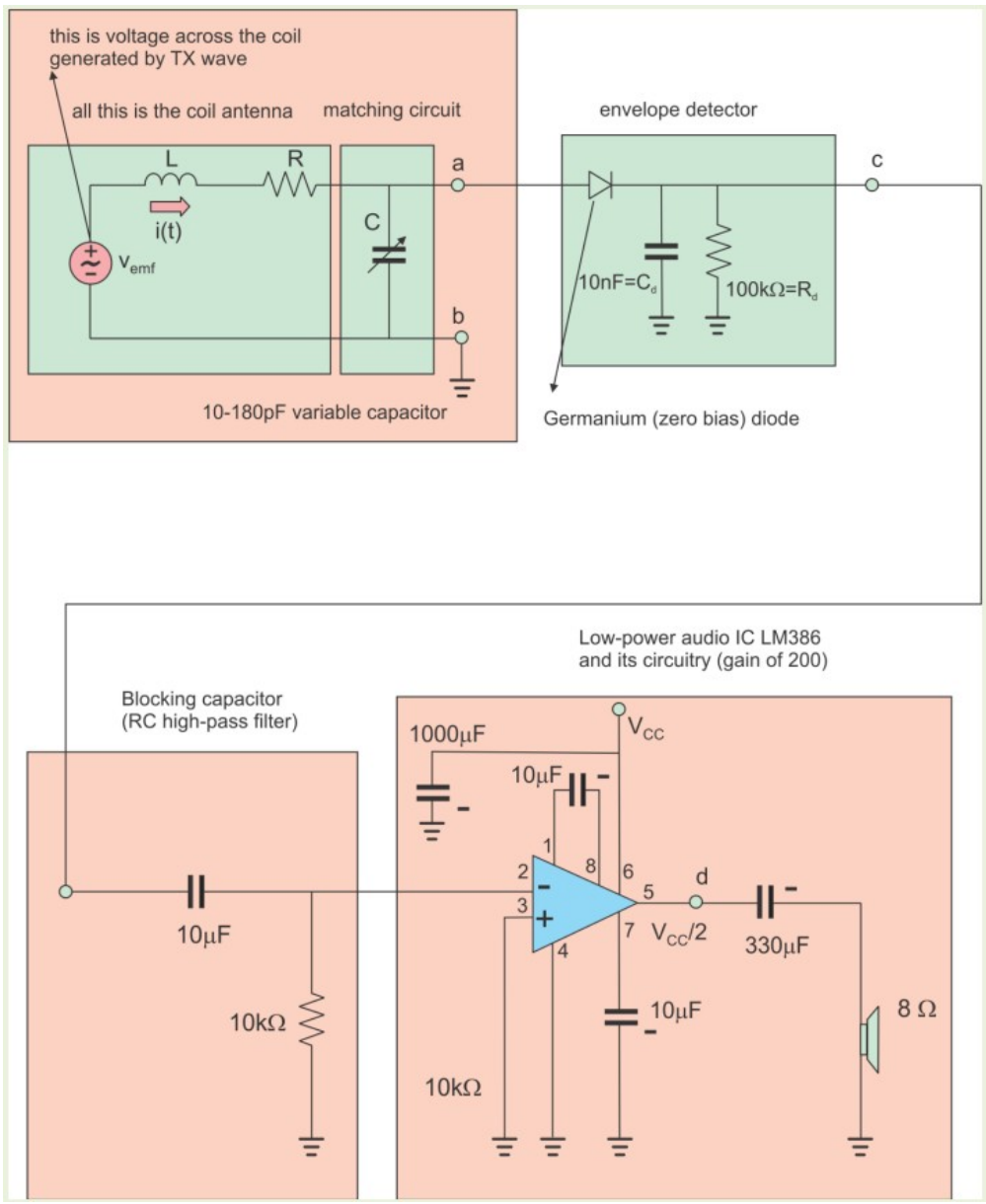

Figure 8: Complete System Schematic: From AM Transmission to Audio Amplification.

5.2 Assembling the Audio Amplifier:

On the remaining half of the second breadboard, assemble the LM386 circuit:

1. **Power:** Use a 9 V supply. Connect V_{CC} to pin 6 and ground to pin 4. Bypass the supply by placing a 1000 μF capacitor between pin 6 and ground (**align the negative stripe to ground!**).
2. **Gain Set:** Place a 10 μF capacitor between pins 1 and 8 (negative lead to pin 8).
3. **Input:** Connect the envelope detector output through a 10 μF blocking capacitor and a 10 kΩ potentiometer (for volume control) to **pin 2**. Connect **pin 3** to ground through a 10 kΩ resistor.
4. **Filtering:** Add a 10 μF bypass capacitor from pin 7 to ground.
5. **Output:** Connect pin 5 to a 330 μF (or larger) DC-blocking capacitor in series with the 8 Ω speaker.
6. **Grounding:** Ensure all ground points (detector, amplifier, and power supply) are tied to a common ground rail.

6 Testing Your AM Transmitter/Receiver Circuit:

Follow these steps to verify your wireless link.

1. **Function Generator Connections:**
   (a) Connect a BNC-to-Audio jack cable to the **Aux In** (or Mod In) port on the rear of the function generator. Then, connect a standard BNC cable to the **Output** of Channel 1 and attach it to your Transmitter (T_x) circuit.
2. **Generator Configuration:**

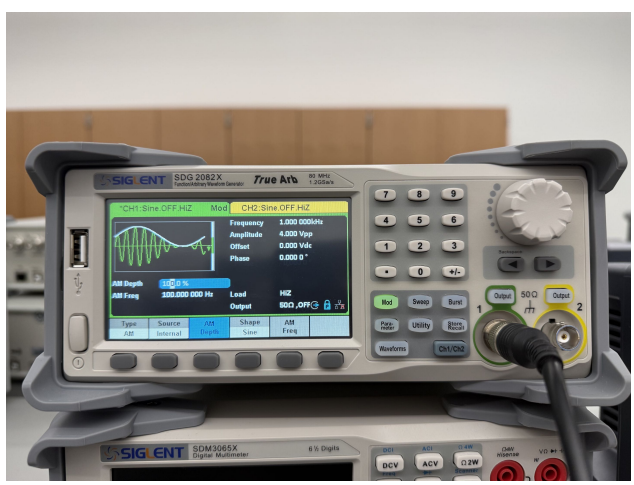

Figure 9: Function Generator Configuration for External AM Modulation.

(a) Turn on the function generator and press the **Mod** button as shown in Figure 9.

(b) Set Type to **AM**, Source to **External**, and set the Carrier Frequency to your group's assigned f_{T_x} (e.g., 600 kHz).

(c) Set the initial Amplitude to $1\,\mathrm{V}_{pp}$.

3. **The Wireless Link:**

   (a) Toggle the output **ON**. Start with the T_x and R_x coils spaced approximately 3 inches apart and aligned collinearly.

   (b) Adjust the variable capacitor on your R_x board until the audio becomes clear.

   (c) Slowly increase the amplitude (up to $9\,\mathrm{V}_{pp}$ max) to improve volume and clarity.

4. **Range Testing:** Experiment with coil separation and orientation. Move the R_x circuit away until the audio is no longer audible. As seen in Figure 10, a well-tuned system should transmit across the lab bench.

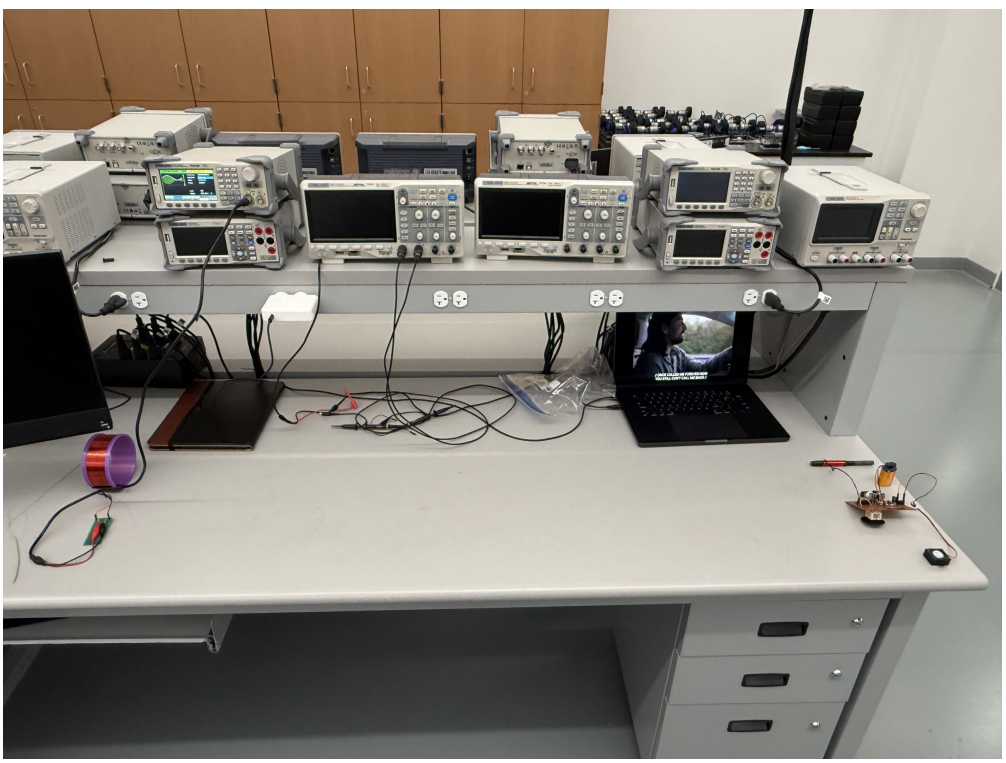

Figure 10: Demonstrating the Maximum Wireless Transmission Distance.

5. **Submission:** Record a short video of your circuit working (play a test song of your choice). Ensure the video shows the T_x and R_x units physically separated to prove the wireless link. Upload the video to **ILearn**.

Adapted from: S. P. Werth, K. M. Win, and S. N. Makarov, "An A.M. Radio Project in a Lower-Level ECE Class," ASEE Annual Conference Proceedings, AC 2012-4075.