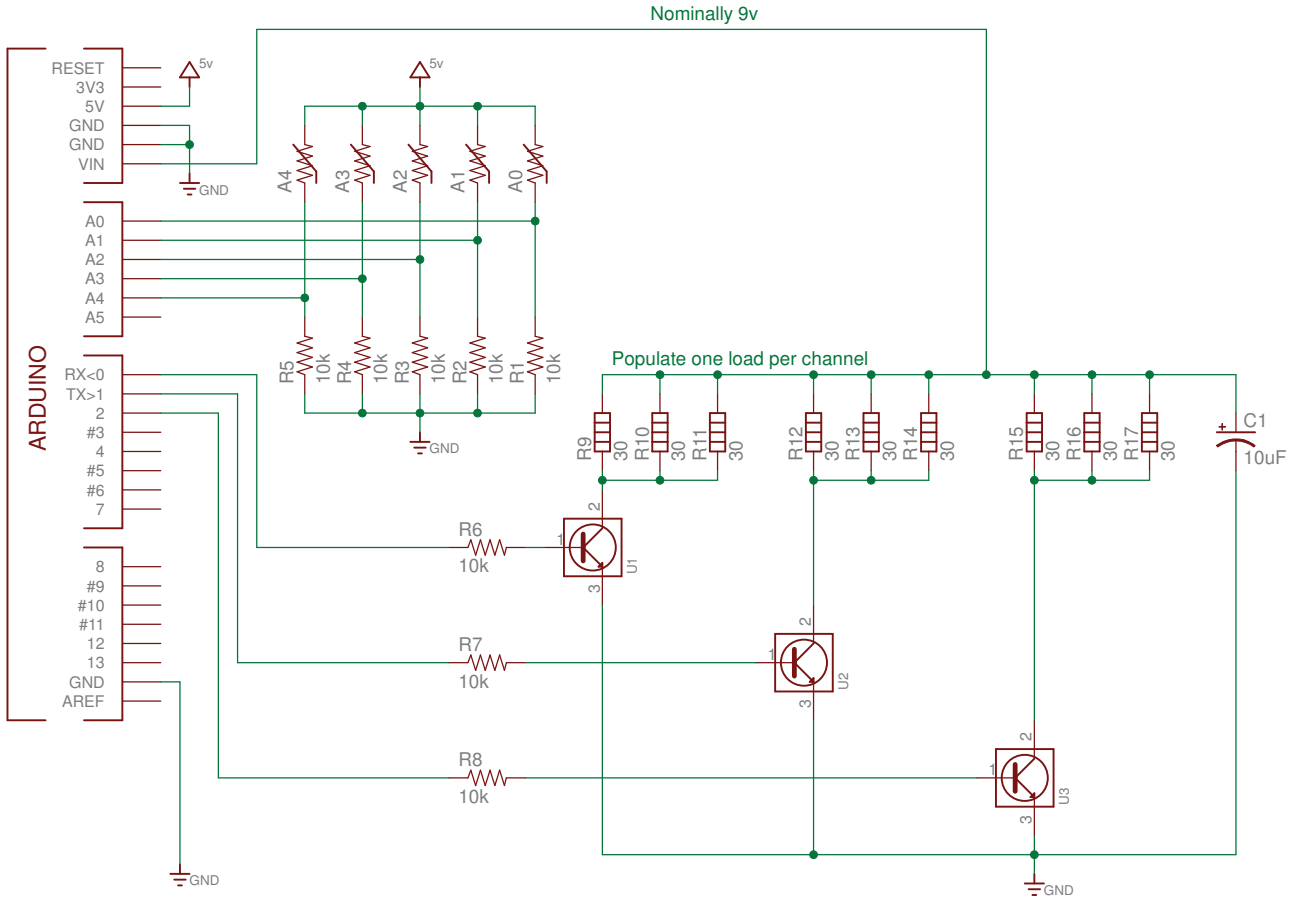

Templeman Automation

SCHEMATIC	Thermocycler Shield
PROJECT	
AUTHOR	CAD
VERSION	1