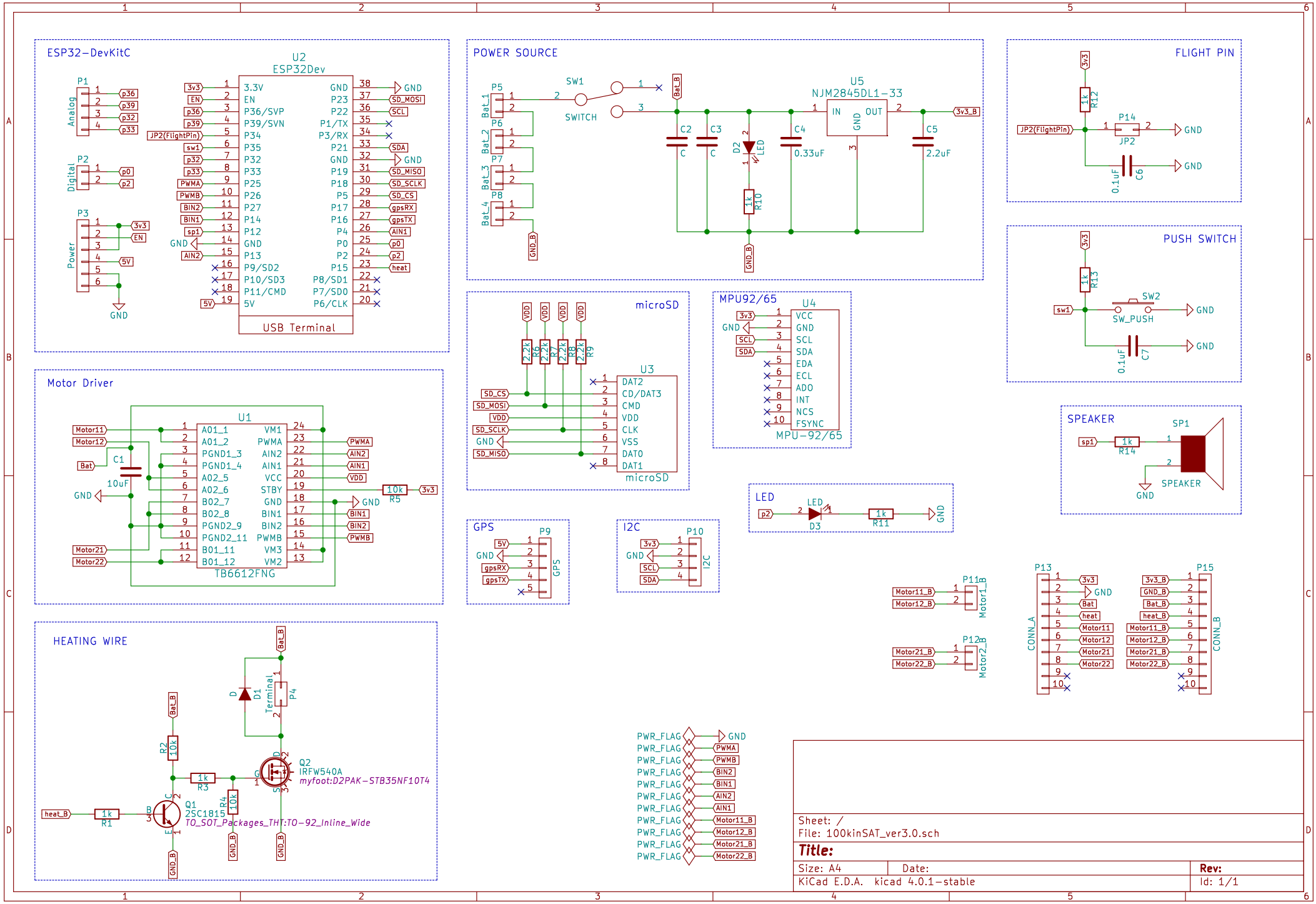
ESP32-DevKitC
U2
ESP32Dev
USB Terminal
POWER SOURCE
SW1
SWITCH
U5
NJM2845DL1-33
FLIGHT PIN
JP2
PUSH SWITCH
SW2
SW_PUSH
Motor Driver
U1
TB6612FNG
microSD
U3
MPU92/65
U4
MPU-92/65
SPEAKER
SP1
LED
GPS
P9
I2C
P10
HEATING WIRE
Q2
IRFW540A
myfoot:D2PAK-STB35NF10T4
Q1
2SC1815
TO_SOT_Packages_THT:TO-92_Inline_Wide
P11
P12
P13
P15
CONN_A
CONN_B
Sheet: /
File: 100kinSAT_ver3.0.sch
Title:
Size: A4
Date:
Rev:
KiCad E.D.A. kicad 4.0.1-stable
Id: 1/1